AmForth Documentation

Release 6.5

Matthias Trute

April 30, 2017

CHAPTER

ONE

USER'S MANUAL

User's Manual For Linux

Initial Setup

This guide makes a few assumtions. Your linux should be a fairly recent linux distribution. For this document an Ubuntu 12.04 LTS is used, others should work in a similiar way. Most of the following is for AVR8. The MSP430 is only for the TI Launchpad and needs no further configuration (yet).

First you'll have to install some packages with the package manager:

- wine (any version, only for AVR8
- naken_asm (any version, only for MSP430)
- ant or make (any version)
- avrdude (only for AVR8)
- mspdebug (any version, only for MSP430)

They may need quite a lot more packages especially wine, install all of them.

Next download the amforth package and un-tar (or unzip) it into a new, empty folder:

```
> pwd
.../amforth
> ls
> tar xvfz amforth-x.y.tgz
.. lots of files
> ls
appl  common avr8 msp430  doc  examples  lib  LICENSE.txt  readme.txt
tools
>
```

Now you need to download the Atmel-Assembler package from the same source as you downloaded the amforth sources. Extract in the in the amforth base directory. This will create a subdirectory `avr8/Atmel` that contains the assembler (as an exe file) and the necessary include files.

```
> ls avr8/Atmel
avrasm2.exe Appnotes2/
>
```

Testing

To test if the installation is complete, change into the directory `appl/template`. There run either **`make`** or **`ant`** with the target name `template.hex` to test the assembler setup.

```
> make template.hex
wine ../../avr8/Atmel/avrasm2.exe -I ../../avr8(Atmel/Appnotes2
  -I ../../avr8/devices/atmega1284p -I ../../avr8 -I ../../common
  -I ../../core/devices/atmega1284p -fI
  -v0 -e template.eep.hex -l template.lst template.asm
>
```

Ant works similiar, note the warning at startup, it can safely ignored:

```
> ant template.hex
Unable to locate tools.jar. Expected to find it in
/usr/lib/jvm/java-6-openjdk-amd64/lib/tools.jar
Buildfile: ....amforth/appl/template/build.xml

template.hex:
  [echo] Producing Hexfiles for atmega128

BUILD SUCCESSFUL
Total time: 4 seconds
>
```

After this step, there should be a number of new files in the directory:

```
> ls
build.xml           dict_appl.inc  template.asm
template.hex  template.map   dict_appl_core.inc
makefile       template.eep.hex  template.lst  words
```

If something went wrong, read the error messages, fix them and repeat this step until all is well.

Create Your Project

If everything works fine, it is now possible to start your own project. This as simple as making a copy of the template directory and editing a few files there.

```
> pwd
... amforth/appl
> cp -r template my
> cd my
>
```

Now edit the files `template.asm` and `makefile` (or `build.xml` if you use ant). The file `template.asm` has a lot of settings, to get a quick start only the lines

```
.equ BAUD = 9600
.include "drivers/usart_0.asm"
```

may need to be changed. The baud number should be obvious. The line usart_x.asm defines the usart port of the controller on which the command prompt will be available. There are only *real* usart ports available, no USB devices (this may change in future releases..)

In the `makefile` find the lines

```
# set the fuses according to your MCU
LFUSE=0xnn
HFUSE=0xnn
# some MCU have this one, see write-fuses target below
EFUSE=0xnn
```

resp. the `build.xml` for ant:

```
<target name="p1284-8.fuses" description="Set fuses for P1284-8">
    <echo>Writing fuses</echo>
    <avrdude-3fuses
```

```
                type="${programmer}"
                mcu="${mcu}"
                efuse="0xff"
                hfuse="0x99"
                lfuse="0xc6"
    />
</target>
```

and change the fuses to meet you hardware settings. Be careful with these numbers, they can potentially corrupt your controller cpu beyond repair.

The next essential setting is the controller itself

```
# the MCU should be identical to the device
MCU=atmega1284p
```

in the `build.xml` find and change all occurances that look like

```
mcu="atmega1284p"
```

with the proper name. The mcu names are taken verbatim as file names in the `avr8/Atmel/Appnotes2` directory and as directory names in the `avr8/devices` directory. Case is significant (should be almost always lower case).

With these changes, rebuild the hex files as described above.

Program The Controller

Hardware and System Setup

The last and final step is to transfer the hex files to the controller. The build tools use the program **avrdude**. To get the hex files to the controller a special hardware called *programmer* is needed. There are many different ones available, ranging from simple parallelport tools like the STK200 to expensive tools like the Atmel JTAG ICE MK2. Dont start trying to use exotic tools like ponyser or other self-made el-cheapo tools unless you know what you're doing.

The Atmel tools AVR ISP MK2 and Dragon are not that expensive and work with the USB port of your computer. Linux needs a file named `/etc/udev/rules.d/99-atmel.rules` to make them accessible for users:

```
# Atmel AVR ISP mkII
SUBSYSTEM=="usb", ATTRS{idVendor}=="03eb", ATTRS{idProduct}=="2104", GROUP="users", MODE="0660"
# usbprog bootloader
ATTRS{idVendor}=="1781", ATTRS{idProduct}=="0c62", GROUP="users", MODE="0660"
# USBasp programmer
ATTRS{idVendor}=="16c0", ATTRS{idProduct}=="05dc", GROUP="users", MODE="0660"
# USBtiny programmer
ATTRS{idVendor}=="1781", ATTRS{idProduct}=="0c9f", GROUP="users", MODE="0660"
```

Note, that the correct GROUP name should include one of the groups your linux account is a member of:

```
> id
uid=1000(user) gid=1000(user) groups=1000(user),4(adm),24(cdrom),
  27(sudo),30(dip),46(plugdev),109(lpadmin),124(sambashare),125(libvirtd)
```

Here the GROUP name "users" would not work! But "user" or "plugdev" would do. If you do not have a setup like this, only root can access the programmer. If you want to use the parallelport programmer STK200, your account should be a member of the "lp" group (check with `ls -l /dev/parport*`).

Any changes to the rules file are detected almost immediately, there should be no reason to restart any linux program.

Project Setup

If your hardware setup is finished, you need to edit the `makefile` or `build.xml` to reflect the settings. In the `makefile` find and edit the lines

```
USB=-c avr911  -P /dev/ttyUSB3
PP=-c stk200  -P /dev/parport0
JTAG=-c jtag2 -P /dev/ttyUSB2
BURNER=$(USB)
```

The `build.xml` is different. This file uses a property file named `programmer.properties` to set the name and the port of the programmer hardware. The `build.xml` file uses a substring from the label to define the programmer. If you want to use e.g. the AVR Dragon as the programmer, just use the name "dragon" as programmer idenifier in your `build.xml`. The ant utility will expand this to "avr.programmer.<label>port" for the -P parameter and "avr.programmer.<label>" to the -c parameter to generate the right command line for **`avrdude`** from the property file.

Serial programmers may be difficult while getting the right port name if using RS232-to-USB converters. The mapping may change over time (e.g. every reboot or USB bus reset).

If everything goes ok, the final command **`make template`** should re-generate the hex files and transfer them to the controller. The default program output should be verbose enough to track any error messages.

User's Manual for Windows

by Karl Lunt for amforth v4.2 (updated for v6.1)

Document contributed to the amforth project on SourceForge.net.

Introduction

This manual describes the amforth programming language and provides details on how to customize the standard release for use on your target platform. This document focuses on developing amforth applications in the Windows environment, using Atmel's freeware AVRStudio4. For information on developing amforth applications in the Linux/Unix environment, consult the Web.

amforth is a variant of the ans94 Forth language, designed for the AVR ATmega family of microcontrollers (MCUs). amforth was developed and maintained by Matthias Trute; the amforth project is hosted and maintained on SourceForge.net (http://sourceforge.net/projects/amforth).

You create your amforth application by creating a custom template file, (optionally) modifying some of the files included in the distribution set, assembling them with AVRStudio4, then moving the resulting object file into flash in the target hardware. Your amforth application resides in flash, using very little RAM or EEPROM.

amforth is fully interactive. You can connect your target hardware to a serial port on your host PC, run a comm program such as Hyperterm, and develop additional Forth words and applications on the target. Each word you create interactively is also stored in flash and is available following reset or power-cycle of the target. You can select one of your amforth words to be the boot task, which will run automatically on the next reset or power-cycle. You can also write interrupt service routines (ISRs) in amforth for handling low-level, time-critical events.

This manual assumes familiarity with Atmel's AVRStudio4 development suite (Windows OS); some knowledge of AVR assembly language programming is helpful but not necessary for basic use of the amforth language. You can download the free AVRStudio4 suite from Atmel (http://www.atmel.com/dyn/products/tools_card.asp?tool_id=2725). You can use version 4.2 or higher; note that you need to fill out a fairly simple registration page to complete the download.

This manual also assumes a working knowledge of the Forth programming language. If you are new to Forth, or if you need a quick refresher or a reference page, you can find a full Web version of Leo Brodie's marvelous book, "Starting Forth," online at http://home.iae.nl/users/mhx/sf.html.

About this document

I created this document to support Matthias' work on amforth. He has designed an excellent Forth that I enjoy using, but I thought newcomers to amforth could use a bit more detailed explanation on setting up an application. As my contribution to his amforth project, I'm providing this user's manual.

This document was written using OpenOffice version 3.2.0. You can download a copy of OpenOffice at the project's website: www.openoffice.org

I have contributed this document to Matthias for inclusion in his project, with the hope that others will edit and expand this text, to make amforth even better. If you modify this document, please include this section (with suitable additions) and include my name in the list of contributors.

Karl Lunt, Bothell, WA USA

A quick look inside amforth

amforth v4.2 is available as a single downloadable file (`amforth-4.2.zip`). Download this file into your working folder (I'll use `c:\projects\amforth-4.2` throughout this document) and unzip them, preserving the subdirectory structure. You should end up with the following subdirectory layout:

```
c:\projects\amforth-x.y\              <-- main directory, holds your project files
                     \appl            <-- holds amforth systems for various MCUs
                     \common          <-- holds common source for amforth primitives
                     \avr8            <-- holds sources specific for avr atmega
                     \msp430          <-- holds sources specific for msp430
                     \doc             <-- holds amforth documentation
                     \examples        <-- holds small projects written in amforth
                     \lib             <-- holds libraries of Forth source files
                     \tools           <-- holds amforth support tools (pd2amforth)
```

You will develop your custom applications by creating simple assembly language source files in the main directory, assembling your source files and the amforth source files with AVRStudio4, then downloading the resulting .hex and .eep files into your target with AVRStudio4.

Note that although you will be creating assembly language source files, the files will be little more than a few macro invocations. Generally, you will not need to know any AVR assembly language to develop your applications.

The following sections describe the various subdirectories and files found in the initial installation of amforth.

`*\words` subdirectory

The `*\words` subdirectory in the `avr8`, `msp430` and `common` directory hold a large collection of amforth words, each defined in a separate `.asm` file. Each file in this subdirectory is a complete word definition, ready to assemble into the final application. For example, here is the entire contents of `equal.asm`, the source file for the word **=**, which compares two values on the top of the stack and leaves behind a flag that is TRUE if the values match or FALSE if they don't.

```
; ( n1 n2 -- flag ) Compare
; R( -- )
; compares two values
VE_EQUAL:
   .dw $ff01
   .db "=",0
   .dw VE_HEAD
   .set VE_HEAD = VE_EQUAL
XT_EQUAL:
   .dw PFA_EQUAL
PFA_EQUAL:
   ld temp2, Y+
   ld temp3, Y+
   cp tosl, temp2
```

```
   cpc tosh, temp3
PFA_EQUALDONE:
   brne PFA_ZERO1
   rjmp PFA_TRUE1
```

This source file gives an excellent view of the layout for each amforth word. It isn't necessary that you understand how a word is laid out inside the dictionary in order to use amforth. However, if you ever need to define your own amforth words, you will need to follow the layout shown here to make sure your words properly integrate into the dictionary.

`*\devices` subdirectory

The `*\devices` subdirectories hold several folders, each defining a target MCU. For each target MCU defined, the associated folder holds four files..

The `device.asm` file is intended to be included as part of your application, and provides assembly language definitions for MCU-specific parameters, such as where RAM starts, the number and layout of the interrupt vectors, and where high flash memory starts.

The `<target>.frt` file contains Forth source defining MCU-specific parameters, such as IO register names and addresses. You can use this file when working in Forth on your target system; it is not needed when building an amforth system in AVRStudio4.

The `device.inc` file contains assembler source and is intended to be included as part of any amforth applications you build for the target device. This file creates Forth words in your dictionary that provide access to the MCU registers on your target.

(Comments on device.py file are needed.)

If you need to develop support files for a different Atmel MCU, you can copy the existing files for a similar device and use these copies as a starting point for your efforts. Rename the files to match the target MCU, then refer to the appropriate Atmel reference manual to determine the proper values for the various registers and parameters. Where possible, ensure that the assembly language names for the ports match those in the existing `.asm` file. If the names do not match, or if you need to add new names to provide support for a new subsystem (such as the CANBus ports on an AT90CAN128), you may need to edit one or more existing amforth source files.

(Add details on how the device.py file is generated.)

`*\amforth.asm`

`amforth.asm` in the `avr8` and `msp430` contains a small amount of assembly language source that: * defines the Forth inner interpreter, * declares the starting address of the Forth kernel, * allocates the memory for the final system, * sets up the small area of EEPROM used by the Forth system, * declares the interrupt service routine (ISR) support, * adds the words to be assembled into low flash memory (`dict_appl.inc`), * adds the words to be assembled into high flash memory (`dict_appl_core..inc`)

The `amforth.asm` included in your original download is essentially complete, in that when assembled it will create most of an amforth system. However, key information about the target hardware is missing and must be supplied by you in what is known as a template file. Details on what this template file contains and how you use the template file to describe your target hardware are contained in a later section.

Note that `amforth.asm` refers to a turnkey application (see XT_APPLTURNKEY in the *.eseg* segment). This execution token is assumed to be an amforth word defined somewhere in your application. The default turnkey application, defined in the file `applturnkey.asm`, provides a typical Forth interactive environment. You can customize `applturnkey.asm` as needed; see the section below on `applturnkey.asm`.

Developing your own amforth system

The following sections describe the files you need to create for building your own amforth system. In general, these are the only files you will need to edit during development. You can often find suitable files already in the

distribution that can serve as starting points for these files; just copy and edit them to make your own files.

dict_appl.inc

The file dict_appl.inc is created by you and contains those amforth words that you want to add to your application above and beyond the words added by default.

You create your own dict_appl.inc file using a standard text editor, such as AVRStudio4's text editor. Here is a simple dict_appl.inc file that I use for creating a typical amforth development system. It provides words for printing unsigned numbers, listing the dictionary, and displaying parts of memory.

Here is the dict_appl.inc file I created for my sample amforth system.

```
; this dictionary contains optional words
; they may be moved to the core dictionary if needed

.include "applturnkey.asm"

; optionally
.include "dict/compiler2.inc"
```

Note that none of the files in the core/dict directory are included. This is done automatically depending on the free flash space. The only exception which can be added manually is the file dict/compiler2.inc. Tnis file is automatically included for devices with 8KB NRWW flash memory. It is possible to add multiple .include statements, the file will only be included once.

You are free to include whatever words from the words/ folder you want in your application. Note that if you accidentally include a duplicate word, assembling the resulting application will generate an error; you will need to edit out the duplicate word and reassemble.

dict_appl_core.inc

The file dict_appl.inc is created by you and contains those amforth words that you want to add to your application above and beyond the words added by dict_minimum.inc and dict_core.inc. The difference between this file and dict_appl.inc above is the words in this file will be written to high flash (the NRWW or bootloader section).

Because of the limited amount of space in the NRWW sections of most ATmega devices, you will want to limit the words in this file to those absolutely required to support amforth. In general, these are words that modify flash, such as istore.asm. Below is the dict_appl_core.inc file for my sample amforth system.

```
.include "words/estore.asm"
.include "words/efetch.asm"
.include "words/istore.asm"
.include "words/istore_nrww.asm"
.include "words/ifetch.asm"
```

This file looks almost the same for all current atmega devices. You'll need to change some entries only for devices from the atxmega line and some bigger atmega types. There are examples in the appl directory for this. If you accidentally include words already included by other segments of the amforth system, you will get assembler errors for the duplicates; just remove the duplicates from your dict_appl_core.inc file.

applturnkey.asm

This file is created by you and contains the assembly language source for a turnkey application, as called out in the file amforth.asm (see appropriate section above).

The file applturnkey.asm usually contains amforth words, written in assembly language, in the form shown in the words/ subdirectory description above.

The following sample `applturnkey.asm` file shows the default turnkey application. This application is suitable for most amforth systems and should be included when you build your system. Here is the `applturnkey.asm` file for my sample amforth system.

```
; ( -- ) System
; R( -- )
; application specific turnkey action
VE_APPLTURNKEY:
   .dw $ff0b
   .db "applturnkey",0
   .dw VE_HEAD
   .set VE_HEAD = VE_APPLTURNKEY
XT_APPLTURNKEY:
   .dw DO_COLON
PFA_APPLTURNKEY:
   .dw XT_INITUSER
   .dw XT_USART
   .dw XT_INTON
   .dw XT_CR
   .dw XT_CR
   .dw XT_VER
   .dw XT_CR
   .dw XT_SLITERAL
   .dw 22
   .db "Karl's amForth system "
   .dw XT_ITYPE

   .dw XT_EXIT
```

The above simple application initializes the user area and *USART0*, displays amforth's version information on the serial terminal, displays an extra message proclaiming this as my amforth system, then exits to the main amforth shell.

Note that my custom message ends with a space. I did this so the message had an even number of letters. If the string length is odd, the assembler reports a warning that it had to add an zero-byte to pad out an even number of bytes. (I could have also used the ,0 technique shown in the declaration of the applturnkey string at the top of the file.)

The template file

You define the characteristics of your target hardware and your application in a template file. The template file is an assembly language source file you create with a standard ASCII text editor, such as AVRStudio4's text editor. Although this is called an assembly language source file, you will typically not write any true assembly language instructions. Instead, the contents of your template file will largely consist of *.include* and *.equ* statements.

Here is the template file, `myproj.asm`, for defining my sample amforth system running on an Atmega328P MCU with a clock frequency of 16 MHz.

```
;
;  myproj.asm      a simple AVRStudio4 assembly-language project for amforth
;
;
; The order of the entries (esp the include order) must not be
; changed since it is very important that the settings are in the
; right order
;
; first is to include macros and default settings from the amforth
; directory.
.include "preamble.inc"

; amforth needs two essential parameters
; cpu clock in hertz, 1MHz is factory default
.equ F_CPU = 16000000
```

```
; and the actual usart port.
.include "drivers/usart_0.asm"

; include the whole source tree.
.include "amforth.asm"
```

Your template file should declare a key equate required by amforth. The equate *F_CPU* defines the oscillator frequency, in Hertz, of your target hardware and is expressed as a long integer. The example shown above shows the target system uses an 16 MHz clock; F_CPU is declared as 16000000.

Next, your template file should include the assembly source file supporting the USART you intend to use as a console on your target hardware. The example above uses USART0 and includes the appropriate device include file.

In general, the remaining equate values (*.equ* and *.set*) in the template file will be calculated automatically, based on previously defined values in the Atmel definition files for the various MCUs.

This completes the custom portion of the template file. All that remains is the final include statement, which basically adds all of the words that make up the standard amforth system. Everything you would need to do for the majority of amforth systems can be done with the statements available to you in your template file.

Setting up AVRStudio4

Begin by creating a new assembly-language project in AVRStudio4. For my sample, I named this project myproj and created it in the `c:\projects\amforth-x.y` folder.

I then created the four above files in my project folder (the folder holding `myproj.aps`).

Next, I added the path to the `core\` folder to my project. To do this, click on Project/Assembler Options and locate the entry for Additional include path. Enter in this field the full path to the corefolder; in my case, this path is `C:\projects\amforth-4.2\core`.

This completes setup in AVRStudio4. Pressing F7 assembles the source files and leaves behind two object files. The file `myproj.hex` contains the flash contents for my amforth system and the file `myproj.eep` holds the EEPROM values needed at startup.

I then hooked my programming pod (an AVRISP mkII) to the target board and applied power. I first made sure that the device's fuses were properly set. In particular, I checked that the bootloader area was set to the maximum (2048 words for the ATmega328P), the EESAVE fuse was checked, and the fuse for BOOTRST (jump to bootloader on reset) was NOT checked.

Finally, I downloaded the EEPROM file to the target, followed by downloading the flash file. When I reset the target, the Hyperterm window hooked to the target's serial port showed the expected amforth announcement. My amforth system was up and running!

What could go wrong?

When you build a properly created amforth system, you should not get any errors or warnings. If the assembler complains about not finding included files, double-check the layout of your amforth folder; it should match what I've described at the beginning of this manual. Additionally, make sure you entered the path to your `core\` folder correctly in the Additional include path box when you set up the project's properties.

If the project builds properly but does not provide characters to your serial port when you download your code to the target, double-check that your Hyperterm settings match those in your template file (`myproj.asm` above). Also confirm that you got the MCU frequency correct in your template file. Also double-check that you put the correct hard-coded paths in your template file and in your `dict_appl.inc` file. Also make sure you download BOTH the *.hex* and the *.eep* files for your project, and that you have the EESAVE fuse on your device checked.

An alternative AVRStudio4 setup

The above method uses two hard-coded paths in your source files. This can cause problems if you later try to change processors; it's easy to forget to change one of the hard-coded paths and it can take time to track down the error.

As an alternative, you can go to Project/Assembler Options and remove the path you added in the Additional include path field. Edit the Additional parameters field to include the following text, all entered on a single line:

```
-I C:\projects\amforth-x.y\avr8\devices\atmega328p -I C:\projects\amforth-x.y\avr8 -I C:\projects
```

Note that the above entry is for my project; adjust as needed for your file paths and target MCU. Be sure to include the single space after each *-I* as shown!

Revision History

Version	Author	Notes
4.2.0	Karl Lunt	Extensive changes to track amforth v4.2.
4.2.1	Karl Lunt	Minor changes to introduction
4.2.2	Matthias Trute	Reformatted with ReST
4.2.3	Matthias Trute	Update for include file changes
4.2.4	Matthias Trute	Update for include file changes

Instructions for Building amforth-5-1 using Atmel Studio 6.1 Components

Author: Craig Lindley Date: November, 2013

Motivation

Building AmForth requires a compatible assembler. Atmel Studio 6.1 for Windows includes avrasm2.exe which works great for this process but using Atmel Studio is overkill in my opinion. On my Mac Atmel Studio 6.1 takes forever to load and execute (using the Parallel's Desktop) plus it crashes half the time when I try to make changes to my amforth project's configuration.

I wanted to be able to quickly make changes to AmForth and turn around new hex and eep files for downloading into an Arduino Uno. Note: the technique I discuss here can be used for any Atmel target hardware, not just an Arduino Uno.

Prerequisites

1. Download and install the and installation of the free version of Atmel Studio 6.1 on a Windows computer *OR* download and unpack the Atmel Assembler package from the amforth file download serice pages.
2. Being comfortable running a command prompt in the Windows environment

Process

1. Create a project directory into which we are going to copy a bunch of files. I chose `c:\amforth` for my project directory.
2. Uncompress and un tar the amforth-5.1 distribution file (`amforth-5.3.tar.gz`) into the project directory

3. If you installed the Atmel Studio locate and copy the avrasm2.exe and the complete include directory from e.g. `c:\Program Files\Atmel\Atmel Toolchain\AVR Assembler\Native\2.1.39.1005\avrassembler` into the project directory
4. Go into the `amforth-5.1\appl\arduino` directory of the distribution and copy `uno.asm`, `dict_appl_code.inc`, `dict_appl.inc` and the `words` directory into the project directory.
5. Go into the `amforth-5.1\avr8\devices` directory and find the directory named with the processor you are going to use (in my case atmega328p) and from that directory copy `device.asm` and `device.inc` into the project directory.
6. Create a bat file in the project directory with the following content:

```
REM batch file for assembling amforth on windows
avrasm2.exe -fI -o uno.hex -e uno.eep -l uno.lst -I .\ -I amforth-5.1\common -I amforth-5.1\avr8 -
```

I named my bat file make.bat.

When you have completed these steps you should have a directory structure as follows:

```
c:\amforth          - your project directory
  amforth-5.3       - the uncompressed and untarred amforth-5.1 distribution
    appl
    avr8
    common
    msp430
    doc
    . . .
    include           - copied from c:\Program Files\Ateml\AtmelToolchain\AVR Assembler\Native\2.1
    words
    applturnkey.asm
    avrasm2.exe       - copied from c:\Program Files\Ateml\AtmelToolchain\AVR Assembler\Native\2.1
    device.asm
    device.inc
    dict_appl.inc
    dict_appl_core.inc
    make.bat
```

If all is well, change directory to your project directory and type make from a command prompt. In less than a second you will have the new amforth files (hex file and eep file) for programming into you target hardware. You could now uninstall Atmel Studio if you want as it is no longer required.

Making changes to amforth is now very easy and turn around is very fast.

CHAPTER

TWO

FAQ

Where do I find more information?

There are 2 documentation files: a *User's Manual* written by Karl Lunt and a more *Technical Guide*.

A lot of information is in the cookbook. There you can find many small recipes on a specific topic. Most of them can be combined.

More can be found in the Maillinglist archive

How do I start with amforth?

First: You will have to build your own amforth first. To do this you really want to make copy of the `appl/template` directory and edit the files in it to fit your environment: controller type, cpu frequency, serial port settings etc. The files are well documented. Once the assembler produces two hex files and no errors (warnings should not come up either) you can proceed. If you are using the Atmel studio, make sure that the project settings include the generation of the eep files. This settings may be disabled by default.

Second you need a programmer to transfer the hex files you generated to the controller. The only programmers that can be used are those that can work on bare (micro controller) systems: ISP (e.g. the Atmel AVRISPmk2 or stk200 or ponyser), JTAG (e.g. the AVR Dragon), High Voltage programming (rarely used) or DebugWire (same: rarely used). Programming tools that relies on a boot loader on the micro-controller itself can not load amforth (the reasons are explained in the *Technical Guide*.

The program to talk with the programmer is avrdude. It is a swiss army knife like tool, that works for almost all devices on all operating systems (Linux, Windows, MacOS and few more). The Makefiles / ANT files use it. Other programs (just like the famous Atmel Studio) are never used by me, you are on your own.

After you transferred "burned" both hex files (one for the flash memory, one for the EEPROM memory), you can begin working with amforth on the serial connection.

How do I use amforth interactively?

At the command prompt you can enter any command and can explore the controller. To simply add two numbers just do the following:

```
> 24 42 + .
66 ok
>
```

To get the content of an IO register just use the memory mapped address (the example reads the 16bit return stack pointer which the just the normal mcu stack pointer):

```
> $5d @ .
1101  ok
> rp@ .
1101  ok
>
```

8bit registers just use the **c@** command instead of the **@**. Writing to any address is just as simple:

```
> 17 pad !
 ok
 > pad @ .
 17  ok
 >
```

What means ??

At the terminal prompt the `??` means that an error occured. If it is displayed, the normal interpreter command prompt got active. Interrupts will continue to work. It is followed by at least one number, if the error occures during a commoand session a second number may appear.

The first number is the error code. Technically it is a negative number. The numbers are in fact an exception code, that is not handled. The standard systems uses a few of them.

The second number is the position in the current input line at which the error has been detected. E.g. when the error code is -13 (not found), the second number points to the last character of the word that could not be found.

There are no hexfiles in the distribution archive!

Hex-files are very specific to the hardware, even the change of the oscillator frequency needs a rebuild. And every processor wants its own settings. There would be far too many different hex-files. For some targets a hex-file is provided (e.g AVR Butterfly).

I get no serial prompt!

You need to program two hex files, one for the flash memory and one for the EEPROM. The makefiles do that already automatically.

Next check are the frequency settings. Atmegas need a configuration (fuse setting) to use an external clock source. By default they run with an unstabilized 1MHz internal clock source, which is not well suited for serial communication. Check the datasheet of your controller to find the correct fuse settings, they are different for different atemgas and very sensitive, be absolutly careful! Rebuilt the hex files with the proper frequency (F_CPU setting).

Finally check the terminal settings: For the AVR devices the default settings come from the file `preamble.inc` and are set to 38400 8N1, no flow control. It is possible and the preferred way to overwrite these settings in you application setup file. Some example application do so. The MSP430 defaults (9600 8N1) are hard coded inside the device settings and cannot be changed easiely (currently).

Finally check the hardware. You may add a LED (or a scope) to the TX pin to check wether the controller sends out the boot message upon reset. Plug off all programmers (they may keep the RESET pin).

Check the mailing list archive for other hints or (finally) ask there for help.

What do all the words do?

amforth tries to implement the Forth 2012 dialect of forth. The last public version is available at (e.g.) Taygeta Archive

I miss a word!

The default configuration includes most but not all words. A few words are written in assembly and can be found in the platform/words directory. The file names usually reflect the forth names. If you need on of those words, you'll have to edit your project files and recompile amforth. A lot more words are available as forth code. To use them you only need to send the forth code to the controller. The Amforth-Shell may become your friend for that.

Can I embed amforth into other programs?

Embedding amforth into other programs (e.g. written in C) is almost impossible. Amforth is designed to run stand-alone and does not follow any conventions that may be used on other systems.

Can I use code written in C (or any other language) with/in amforth?

Short answer: no.

What means the GPL for my programs?

As long as you don't use your (Forth) program with amforth: Nothing. It's your code and you decide everything.

If you combine your code with amforth, the result is GPL licensed, no matter what you think about it. That means your users (sometimes called customers or business partners) have access to your code together with amforth under the GPL. It doesn't matter whether you use the GPLv2 (older versions of amforth) or newer ones. I kindly ask these users to send me a copy.

Why should I send you my code?

Really simple: I want to improve amforth. The best way to do so is to study code using it. That includes ports of modules to other Forth's.

Does amforth run on hardware xy?

amforth is targeted to Atmel AVR Atmega controllers. It does not and never will run on Attiny controllers or on completely different architectures like PIC or 8051 etc. Work is currently under way to port to the Texas Instruments MSP430.

What about the fuses?

Just set them to the factory defaults and adjust the oscillator settings only. amforth uses the self programming capabilities so if any boot loader works, amforth should do so. Make sure that the boot loader size is as large as the NRWW flash size, otherwise the flash write operation may fail silently and crash your system completely.

What about boot loaders?

amforth overwrites them, they are no longer existent. And this can only be changed for boot loaders with an application usable API to use the flash self programming feature. There are none currently available. With such an API the only word that's need to be rewritten is **`!i`**.

What do I need for linux?

The linux assembler avra comes without the controller definition files. They need to copied from the Atmel AVR Studio. Please use the version 1 of the files from the `AvrAssembler/appnotes` directory. The Makefiles in the applications expect the files in the directory `~/lib/avra`. Please note that these files are horribly outdated and do not cover all controller types. For those controllers you need the Atmel AVR Assembler version2. See next note.

How do I use Atmel's assembler with linux?

First you need a working setup of a recent wine. Then put the `avrasm2.exe` and the `Appnotes` directory somewhere on your system. Then edit the `makefile` to look similiar too:

```
AVRDUDE=/usr/local/bin/avrdude

PP=-c stk200  -P /dev/parport0
JTAG=-c jtag1 -P /dev/ttyUSB2

AVRASM=wine ~/projects/avr/AvrAssembler2/avrasm2.exe
AVRASMOPTS=-fI -I ~/projects/avr/AvrAssembler2/Appnotes -e $@.eep -l $@.lst -m $@.map

p8.hex: *.asm words/*.asm devices/*.asm
  $(AVRASM) $(AVRASMOPTS) p8.asm

p8: p8.hex
  $(AVRDUDE) $(PP) -p atmega644 -e -U flash:w:p8.hex:i -U eeprom:w:p8.hex.eep:i
```

please note that the file names are slightly different from the avra generated code. Good luck.

What resources are available in my own assembly words?

You can use any resource if you take care. There are some things you need to obey: Never use the T flag in the machine status register SREG. Only the CPU registers named temp0..temp5 are save to use without the need of restoration. Any other register change may be harmful.

What is the release policy?

Releases are made when there are ready. Usually the list of changes is limited to only a few things. Every release is considered stable and ready for production use. The version number gets increased by 0.1 with every release. That means, that a .0 release is nothing special.

How do I send forth code to the system?

Basically send them as ascii text via the terminal line. A command line like:

```
> ascii-xfr -s -c 10 -l  100  devices/atmega32.frt > /dev/ttyS0
```

can be used. amforth does not currently support any kind of flow control. Any transfer has to be slow enough to not overrun the buffers. A more sophisticated approach is described in *Shells And Upload*

I found a bug

Too bad. Please send all information to the Mailling List

CHAPTER

THREE

TECHNICAL GUIDE

First Steps

The first steps require an ATmega micro controller or a TI Launchpad 430 with a MSP430G2553 controller. The AVR needs a separate RS232 connection to an PC, the MSP430 works with the USB connection for both the command terminal and the reprogramming.

User Interface

amforth has a simple user interface. It is available as a serial port.

```
> cold
amforth 5.0 ATmega16 8000 kHz
> words
nr> n>r (i!) !i @i @e !e nip not s>d up! up@ ...
>
```

Next Steps

The next steps are performing some actions like LED on / off and defining new commands to extent the interpreter. The *Cookbook* has a lot of recipes for both.

Architecture

Overview

amforth is a 16 bit Forth implementing the indirect threading model. The flash memory contains the whole dictionary. The RAM contains buffers, variables and the stacks. Depending on the platform, either the EEPROM or a special section of the flash is used for vital data such as pointers or configuration settings.

The compiler is a classic compiler without any optimization support.

Amforth uses all of the CPU registers internally: The data stack pointer, the instruction pointer, the user pointer, and the Top-Of-Stack cell. The hardware stack is used as the return stack. Some registers are used for temporary data in primitives.

Text Interpreter

The interpreter is a line based command interpreter. It based upon :**REFILL** to acquire the next line of characters, located at a position **SOURCE** points to. While processing the line, the pointer **>IN** is adjusted accordingly. Both words **REFILL** and **SOURCE** are USER based deferred words which allows to use any input source on a thread specific level. The interpreter itself does not use any static buffers or variables (**>IN** is a USER variable as well).

A given string is handled by **INTERPRET** which splits it into whitespace delimited words. Every word is processed using a list of recognizers. Processing ends either when the string end is reached or an exception occurs.

SOURCE and REFILL

SOURCE provides an addr/len string pair that does not change during processing. The task of **REFILL** is to fill the string buffer, **SOURCE** points to when finished.

There is one default input source: The terminal input buffer. This buffer gets filled with **REFILL-TIB** that reads from the serial input buffers (**KEY**). **SOURCE** points to the Terminal Input Buffer itself. Another input source are plain strings, used by **EVALUATE**.

Recognizer

Recognizer are a part of the text (command) interpreter. They are responsible for analyzing a single word. The result consists of two elements: The actual data (if any) and an object like identifier connected with certain

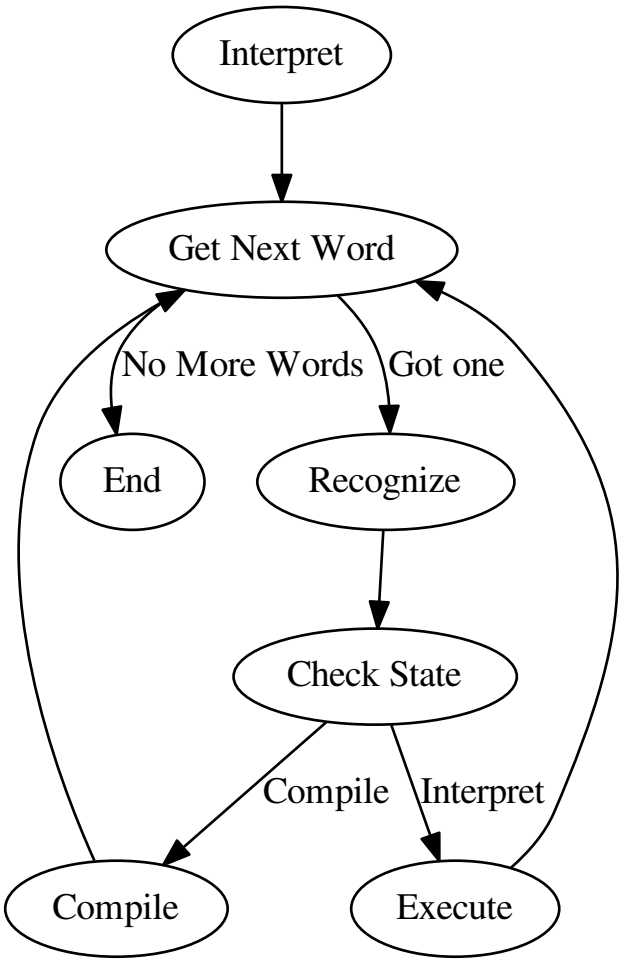

methods. The Forth text interpreter reads from the input source and splits it into whitespace delimited words. Each word is fed into a list of actions which parse it. If the parsing is successful (e.g. it is a number or a word from the dictionary) the recognizer leaves the data and an method table to deal with it. Depending on the interpreter state one of the methods is executed to finally process the data. The first method is called in interpreter state. It is usually a noop, since the recognizer has done all the work already.

The 2nd method is responsible to perform the compile time semantics. That usually means to write it into the dictioanary or to execute immediate words.

The third method is used by :command‘postpone‘ to compile the compilation semantics. It honors the immediate flags as well.

`Recognize` is an iteration over a recognizer stack until the first parsing methods returns something different than **DT:NULL**. If the recognizer stack is exhausted without a match, the **DT:NULL** return value is generated. The string location that is passed to the parse actions is preserved and is restored for every iteration cycle.

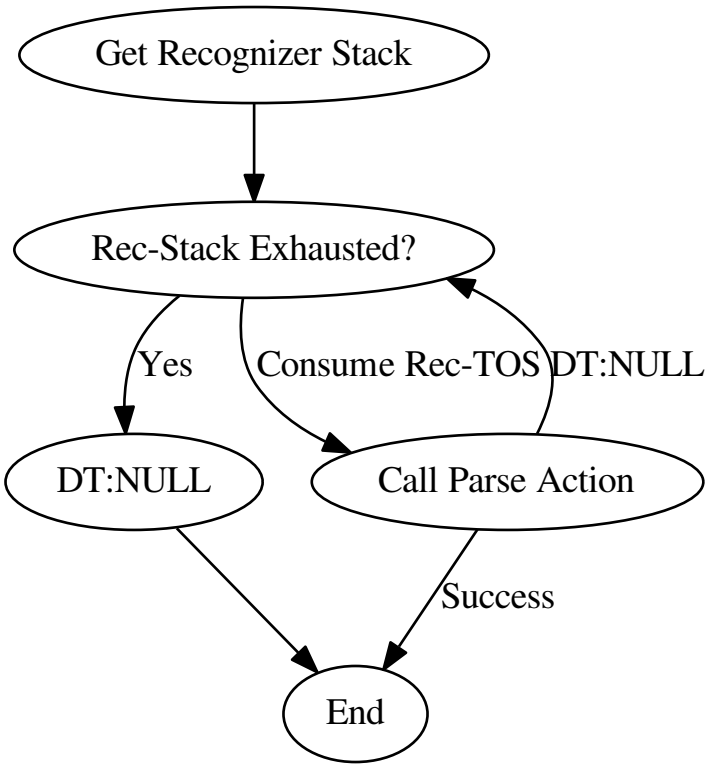

A recognizer consists of a few words that work together. To ease maintenance, a naming convention is used: The recognizer itself is named with the prefix `rec:`. The method table name gets the prefix `r:` followed by the same name as the recognizer.

POSTPONE serialises the parsed data as literals and adds the compile action from the method table. This an almost generic operation, it depends only on the number of cells from the parsing actions.

Recognizer List

The interpreter uses a list of recognizers. They are managed with the words **get-recognizers** and **set-recognizers**.

The entries in the list are called in order until the first one returns a different result but **DT:NULL**. If the list is exhausted and no one succeeds, the **DT:NULL** is delivered nevertheless and leads to the error reactions.

The standard recognizer list is defined as follows

```
: default-recs
  ['] rec:intnum ['] rec:word
  2 forth-recognizer set-recognizers
;
```

The standard word **marker** resets the recognizer list as well.

INTERPRET

The interpreter is responsible to split the source into words and to call the recognizers. It also maintains the state.

```
: interpret
  begin
    parse-name ?dup if drop exit then
    forth-recognizer recognize ( addr len -- i*x r:table )
    state @ if i-cell+ then \ get compile time action
    @i execute ?stack
  again
;
```

recognize always returns a valid method table. If no recognizer succeeds, the **DT:NULL** is returned with the addr/len of the unknown-to-handle word.

API

Every recognizer has a method table for the interpreter to handle the data and a word to check (and convert) whether a string matches the criteria for a certain data type.

```
\ order is important!
:noname ... ;   \ interpret action
:noname ... ;   \ compile action
:noname ... ;   \ postpone action
dt-token: dt:foo

: rec:foo ( addr len -- i*x dt:foo | DT:NULL ) ... ;
```

The word **rec:foo** is the actual parsing action of the recognizer. It analyzes the string it gets. There are two results possible: Either the word is recognized and the address of the data token is returned or the NULL data token is used which is actually a predefined method table named **DT:NULL**.

The calling parameters to **rec:foo** are the address and the length of a word in RAM. The recognizer must not change it. The result (i*x) is the parsed and converted data and the method table to deal with it.

There is a standard method table that does not require additional data (i*x is empty) and which is used to communicate the "not-recognized" information: **r:fail**. Its method table entries throw the exception -13 if called.

Other pre-defined method tables are **dt:num** to deal with single cell numeric data, **dt:dnum** to work with double cell numerics and **dt:xt** to execute, compile and postpone execution tokens XT from the dictionary.

The words in the method tables get the output of the recognizer as input on the data stack. They are excpected to consume them during their work.

Default (NULL)

This is a special system level recognizer. It is never called actually but its data token (DT:NULL) is used as both a error flag and for the final error actions. Its methods get the addr/len of a single word. They consume it by printing the string and throwing an exception when called. The effect is to get back to the command prompt if catched inside the **quit** loop.

```
:noname type -13 throw ; dup dup
dt-token: dt:null

\ this definition is never called actually
: rec:fail ( addr len -- r:fail)
  2drop dt:null
;
```

NUMBER

The number recognizer identifies numeric data in both single and double precision. Depending on the actual data width, two different data tokens are returned.

The postpone action follows the standard definitions by not allowing to postpone numbers. Instead the number is printed and an exception is thrown.

```
' noop
' literal
:noname . -48 throw ; \ subject to dispute
dt-token: dt:num

' noop
' 2literal
:noname d. -48 throw ; \ subject to dispute
dt-token: dt:dnum

: rec:intnum ( addr len -- n r:num | d r:dnum | r:fail )
  number if
   1 = if dt:num else dt:dnum then
  else
    dt:null
  then
;
```

FIND

This recognizer tries to find the word in the dictionary. If sucessful, the execution token and the flags are returned. The data token contains words to execute and correctly deal with immediate words for compiling and postponing.

```
( XT flags -- )
:noname drop execute ;
:noname 0> if compile, else execute then ;
:noname 0> if postpone [compile] then , ;
dt-token: dt:xt

: rec:word ( addr len -- XT flags dt:xt | dt:null )
  find-name ?dup if
    dt:xt
  else
    dt:null
  then
;
```

Multitasking

amforth does not implement multitasking directly. It provides the basic functionality however. Within IO words the deferred word **PAUSE** is called whenever possible. This word is initialized to do nothing (**NOOP**).

Exceptions

Amforth uses and supports exceptions as specified in the ANS wordset. It provides the **CATCH** and **THROW** commands. The outermost catch frame is located at the interpreter level in the word **QUIT**. If an exception with a negative value is catched, **QUIT** will print a message with this number and and re-start itself. Positive values silently restart **QUIT**.

The next table lists the exceptions, amforth uses itself.

Exception	Meaning	Thrown in
-1	silent abort	ABORT
-2	abort with message	ABORT"
-4	stack underflow	?STACK
-13	undefined word	rec-notfound, tick
-16	Invalid word	(create)
-50	search order exhausted	SET-ORDER

Memory Allocation

The ANS 94 standard defines three major data regions: name space, code space and data space. The amforth system architecture maps these memory types to the built-in ones: Flash, RAM and (if available) EEPROM. These three memory types have their own address space independently from the others. Amforth does not unify these address spaces into one.

Amforth uses the flash memory as the location for all standard data spaces: name, code and data space. Contrary to the standard some words that should operate on the data space use RAM adresses instead. These words are HERE, @ (fetch), ! (store) and simimliar. Similiarly the so called transient regions are in RAM as well.

Other words like , (comma) operate on the flash address and thus directly in the dictionary.

User Area

The User Area is a special RAM storage area. It contains the USER variables and the User deferred definitions. Access is based upon the value of the user pointer UP. It can be changed with the word **`UP!`** and read with **`UP@`** . The UP itself is stored in a register pair.

The size of the user area is determined by the size the system itself uses plus a configurable number at compile time. For self defined tasks this user supplied number can be changed for task local variables.

The first USER area is located at the first data address (usually RAMSTART).

Address offset (bytes)	Purpose
0	Multitasker Status
2	Multitasker Follower
4	RP0
6	SP0
8	SP (used by multitasker)
10	HANDLER (exception handling)
12	BASE (number conversion)
14	EMIT (deferred)
16	EMIT? (deferred)
18	KEY (deferred)
20	KEY? (deferred)
22	SOURCE (deferred)
24	>IN
26	REFILL (deferred)

The User Area is used to provide task local information. Without an active multitasker it contains the starting values for the stackpointers, the deferred words for terminal IO, the BASE variable and the exception handler.

The multitasker uses the first 2 cells to store the status and the link to the next entry in the task list. In that situation the user area is/can be seen as the task control block.

Beginning with release 3.7 the USER area has been split into two parts. The first one called system user area contains all the variables described above. The second one is the application user area that contains all variables defined with the USER command. The default application user area is empty and by default of size zero.

Compiler

The Amforth Compiler is based upon immediate words. They are always executed, regardless of the value in the **state** variable. All non-immediate words get compiled verbatim with their respective execution token. It is simply appended to the current DP location.

Immediate words are usually executed (unless some special action such as **postpone** is applied). The immediate words do usually generate some data or compile it to the dictionary. They are not compiled with their execution token.

There are no optimization steps involved. The XT are written immediately into the dictionary (flash).

The inner interpreter, the forth virtual machine, can, just like a real CPU, only execute words, one after the next. This linear control flow is usually not sufficient to do real work. The Forth VM needs to be redirected to other places instead of the next one, often depending on runtime decisions.

Since Edsgar Dijkstra the structured programming is the preferred way to do it. AmForth provides all kinds of them: sequences, selections and repetitions. Sequences are the simple, linear execution of consecutive words. Selections provide a conditional jump over code segments. They are usually implemented with the **ìf** command. Multiple selections can be made with **case**. Repetitions can be unlimited or limited. Limited Repetitions can use flags and counter/limits to leave the loop.

There is also support for out-of-band control flow: Exceptions. They provide some kind of emergency exits to solve hard problems. They can be catched at any level up to the outer text interpreter. It will print a message on the command terminal and will wait for commands.

Building Blocks

All control structures can be implemented using jumps and conditional jumps. Every control operation results in either a forward or a backward jump. Thus 6 building blocks are needed to create them all: **(branch)**, **(0branch)**, **>mark**, **<mark**, **>resolve** and **<resolve**. None of them are directly accessible however. Most of these words are used in pairs. The data stack is used as the control flow stack. At runtime the top-of-stack element is the flag. All words are used in immediate words. They are executed at compile time and produce code for the runtime action.

(branch) is a unconditional jump. It reads the flash cell after the command and takes it as the jump destination. Jumps can be at any distance in any direction. **(0branch)** reads the Top-Of-Stack element and jumps if it is zero (e.g. logically FALSE). If it is non-zero, the jump is not made and execution continues with the next XT in the dictionary. In this case, the branch destination field is ignored. These two words are implemented in assembly. A equivalent forth implementation would be

```
: (branch) r> 1+ @i >r ;
: (0branch) if (branch) else r> 1+ >r then ;
```

Note the chicken-and-egg problem with the conditional branch operation.

Contrary the MSP430. Its inner interpreter uses *relative* branches instead. That influences the next higher level word internally, but does not affect words using them.

The **mark** words put the jump destination onto the data stack. This information is used by the **resolve** words to actually complete the operation. The **<mark** additionally reserves one flash cell. The **<resolve** stores the information for the backward jump at the current location of the dictionary pointer, the **>resolve** places the information at the place the **>mark** has reserved and completes the forward jump. Every mark needs to be paired with the *right* resolve.

```
: >mark dp -1 , ;
: >resolve ?stack dp swap !i ;

: <mark dp ;
: <resolve ?stack , ;
```

The place holder -1 in **>mark** prevents a flash erase cycle when the jump is resolved using the **!i** in **>resolve**. The **?stack** checks for the existence of a data stack entry, not for a plausible value. It the data stack is empty, an exception -4 is thrown.

```
: ?stack depth 0< if -4 throw then ;
```

Highlevel Structures

The building blocks described above create the standard control structures: conditional execution and various loop constructs.

The conditional execution compiles a forward jump to another location. The jump destination is resolved with **then**. An **else** terminates the first jump and starts a new one for the final **then**. This way an alternate code block is executed at runtime depending on the flag given to the **if**.

```
: if   postpone (0branch) >mark ; immediate
: else postpone (branch)  >mark swap >resolve ; immediate
: then >resolve ; immediate
```

There is a rarely used variant of the **if** command, that compiles an unconditional forward branch: **ahead**. It needs to be paired with a **then** to resolve the branch destination too. An **else** would not make any sense, but is syntactically ok.

```
: ahead postpone (branch) >mark ; immediate
```

There are more variants of multiple selections possible. The **case** structure is based upon nested **if**'s. Computed goto's can be implemented with jump tables whith execution tokens as code blocks. Examples are in the `lib` directory.

The loop commands create a structure for repeated execution of code blocks. A loop starts with a **begin** to which the program flow can jump back any time.

```
: begin <mark ; immediate
```

The first group of loop command are created with **again** and **until**. They basically differ from each with the branch command they compile:

```
: until postpone (0branch) <resolve ; immediate
: again postpone (branch) <resolve ; immediate
```

The other loop construct starts with **begin** too. The control flow is further organized with **while** and **repeat**. **while** checks wether a flag is true and leaves the loop while **repeat** unconditionally repeats it. Multiple **while** 's are possible, they have to be terminated properly with a **then** for each of them (except the one, which is terminated with the **repeat**.

```
: while postpone (0branch) >mark swap ; immediate
: repeat again >resolve ; immediate
```

Counted loops repeat a sequence of words for some predefined number of iterations. It is possible to exit prematurely. The standard loop checks for the exit condition after the loop body has been executed. A special variant (?DO) does it once at the beginning and may skip the loop body completely. To actually implement the loop and its possible exit points a separate LEAVE stack (named after the LEAVE forth word) is used at compile time. It receives all premature exit points which are resolved when compiling LOOP (or +LOOP).

```
: endloop
 <resolve \ standard backward loop
 \ now resolve the premature exits from the leave stack
 begin l> ?dup while postpone then repeat ;

: do postpone (do) <mark 0 >l ; immediate
: loop postpone (loop) endloop ;  immediate
: +loop postpone (+loop) endloop ; immediate
: leave postpone unloop postpone ahead >l ; immediate
```

unloop is an assembly word dropping the loop counter and loop limit information from the return stack.

The **?do** works differently. It uses the **do** and the leave stack to achieve its goals.

```
... ?docheck if do ... loop then ....
```

The helper word **?docheck** checks the loop numbers and creates a well prepared stack content.

```
\ helper word
: ?docheck ( count limit -- count limit true | false )
    2dup = dup >r if 2drop then r> invert ;

: ?do postpone ?docheck
    postpone if \ here we create the forward branch
    postpone do \ initialite leave stack
    swap >l     \ put the IF destination on the leave stack
; immediate
```

The runtime action of **do** (the **(do)**) puts two information onto the return stack: The modified loop counter abd the loop limit. The loop index and the loop limit are modified by adding 0x8000 to both numbers. That makes it easy to check the boundary cross required by Forth by simply checking the controller overflow check. The price to pay is a slightly slower access to the loop index (I and J).

The runtime of **loop** (the **(loop)**) checks the limits and with **0branch** decides whether to repeat the loop body with the next loop counter value or to exit the loop body. If the loop has terminated, it cleans up the return stack. The **+loop** works almost identically, except that it reads the loop counter increment from the data stack.

The access to the loop counters within the loops is done with **i** and **j**. Since the return stack is used to manage the loop runtime, it is necessary to clean it up. This is done with either **unloop** or **leave**. Note that **unloop** does not leave the loop!

DOES>

DOES> is used to change the runtime action of a word that **create** has already defined. Since the dictionary is in flash which may only be written once, the use of **create** is should be replaced with the command **<builds**. This commands works exactly the same way but enables **does>** to work properly.

Its working is described best using a simple example: defining a constant. The standard word **constant** does exactly the same.

```
> : con <builds , does> @i ;
 ok
> 42 con answer
 ok
> answer .
 42 ok
```

The first command creates a new command **con**. With it a new word gets defined, in this example **answer**. **con** calls **create**, that parses the source buffer and creates a wordlist entry **answer**. After that, within **con** the top-of-stack element (42) is compiled into the newly defined word. The **does>** changes the runtime of the newly defined word **answer** to the code that follows **does>**.

does> is an immediate word. That means, it is not compiled into the new word (con) but executed when con gets compiled. This compile time action creates a small data structure similar to the wordlist entry for a noname: word. The address of this data structure is an execution token. This execution token replaces the standard XT that a wrongly defined **con** (using create instead of builds) would have written already. This leads inevitably to a flash erase cycle, that may not be available on all platforms.

Standard Wordlists

Forth 2012

amforth implements most or all words from many Forth 2012 word sets. Most words are already included in the standard setup, others are loadable from files in the `lib/forth2012` directory. A floating point library is available from the community repository. Words from the word set FILE-ACCESS are dropped completely. The others are at least partially implemented.

Core and Core EXT

All words from the CORE word set are available. CORE EXT drops the (deprecated) words **C"**, **CONVERT**, **EXPECT**, **SPAN** and **ROLL**.

Loop counters are checked on signed compares.

Number Prefixes The number base can be specified by prepending the $, # or % signs. Single characters such as 'a' are supported via a loadable module.

Defer and IS **defer** gives the possibility of vectored execution. Amforth has 3 different kind of such vectors, varying in how they are stored: EEPROM, RAM or the USER area. The EEPROM makes it possible to save the settings permanently, the RAM enables frequent changes. Finally the user area is for multitasking.

Buffer: The buffer allocates a named memory (RAM) region. It is superior to the usual create foo xx allot since amforth has a non-unified memory model and the code snippet does not the same as an unified memory model forth (with the dictionary being at the same memory as the allot command works).

Block

Amforth has almost complete block support to work with the flash memory and I2C eeprom devices.

To work with different backends, a layered design is used. The low level hardware access words `load-buffer` and `save-buffer` are deferred words that are called with a RAM buffer location (addr/len pair) and the block number. All thay have to do is to transfer the buffer content from/to the backend storage. The highlevel words from the BLOCK wordset do the buffer management and provide the user visible API.

Double Number

Double cell numbers work as expected. Not all words are implemented. Entering them directly using the dot-notation work for dots at the end of the number, not if the dot is somewhere within it.

Exception

Exceptions are fully supported. The words **ABORT** and **ABORT"** use them internally.

The implementation is based upon a variable HANDLER which holds the current return stack pointer position. This variable is a USER variable.

Facility

The basic system uses the **KEY?** and **EMIT?** words as deferred words in the USER area.

The word **MS** is implemented with the word **1MS** that busy waits almost exactly 1 millisecond. The calculation is based upon the frequency specified at compile time. There are variants which are multitasking friendly but less accurate.

The words **EKEY** and **EKEY>CHAR** are not implemented.

To control a VT100 terminal the words **AT-XY** and **PAGE** are written in forth code. They emit the ANSI control codes according to the VT100 terminal codes.

File Access

amforth does not have filesystem support. It does not contain any words from this word set.

Floating Point

amforth has a loadable floating point library. It contains the basic words to deal with single precision floats. The floats are managed on the standard data stack. After loading the library floats can be entered directly at the command prompt. Some speed sensitive words are available as assembly code as well.

Locals

The locals support offers a single local value with the name X. It can easily expanded to support more by the user.

Memory Allocation

amforth does not support the words from the memory allocation word set.

Programming Tools

Variants of the words **.S**, **?** and **DUMP** are implemented or can easily be done. The word **SEE** is available as well.

STATE works as specified.

The word **WORDS** does not sort the word list and does not take care of screen sizes.

The words **;CODE** and **ASSEMBLER** are not supported. amforth has a loadable assembler which can be used with the words **CODE** and **END-CODE**.

The control stack commands **CS-ROLL** and **CS-PICK** are not implemented. The compiler words operate with the more traditional **MARK** / **RESOLVE** word pairs.

FORGET is not implemented since it would be nearly impossible to reset the search order word list with reasonable efforts. The better way is using **MARKER** from the library.

An EDITOR is not implemented.

[IF], **[ELSE]** and **[THEN]** are not implemented.

n>r and nr> Fully supported

Traverse-wordlist Iterating over a wordlist works. The name>xy words are supported.

Word Lists and Search Order

Amforth supports the ANS Search Order word list. A word list consist of a linked list of words in the dictionary. There are no limits on the number of word lists defined. Only the length of the active search order is limited: There can be up to 8 entries at any given moment. This limit can be changed at compile time in the application definition file.

Internally the word list identifier is the address where the word list start address is stored in the EEPROM. Creating a new word list means to allocate a new EEPROM cell. Since the ANS standard does not give named word list there is library code available that implements the old fashioned vocabulary.

Strings

All words from the strings word set are supported.

Amforth

COLD

The startup code is in the file `cold.asm`. It gets called directly from the MCU reset vector.

This assembly part of the startup code creates the basic runtime environment to start the virtual forth machine. It sets up the stack pointers and the user pointer and places the forth instruction pointer on the word WARM. Then it boots the forth virtual machine by jumping to the inner interpreter.

The start addresses of the stacks are placed to the user area for later use as well.

WARM

The word **WARM** is the high level part of the forth VM initialization. When called from within forth it is the equivalent to a RESET. **WARM** initializes the **PAUSE** deferred word to do nothing, calls the application defined **TURNKEY** action and finally hands over to **QUIT**.

TURNKEY

The turnkey is a EEPROM deferred word that points to an application specific startup word.

Its main task is to initialize the character IO to enable the forth interpreter to interact with the command prompt. The examples shipped with amforth do this by "opening" the serial port, switching to decimal number conversion and setting up the character IO deferred words (KEY, EMIT etc).

QUIT

QUIT initializes both data and return stack pointers by reading them from the user area and enters the traditional ACCEPT – INTERPRET loop that never ends. It provides the topmost exception catcher as well. Depending on the exception thrown, it prints an error message and restarts itself.

MCU Access

amforth provides wrapper words for the micro controller instructions **SLEEP** and **WDR** (watch dog reset). To work properly, the MCU needs more configuration. amforth itself does not call these words.

Assembler

Lubos Pekny has written an AVR8 assembler for amforth. To support it, amforth provides the two words **CODE** and **END-CODE**. The first creates a dictionary entry and sets the code field to the data filed address. The interpreter will thus jump directly into the data field assuming some machine code there. The word **END-CODE** places a JUMP NEXT into the data field. This finishes the machine instruction execution and jumps back to the forth interpreter.

Memories

Atmega micro controller have three different types of memory. RAM, EEPROM and Flash. The words **@** and **!** work on the RAM address space (which includes IO Ports and the CPU register), the words **@e** and **!e** operate on the EEPROM and **@i** and **!i** deal with the flash memory. All these words transfer one cell (2 bytes) between the memory and the data stack. The address is always the native address of the target storage: byte-based for

EEPROM and RAM, word-based for flash. Therefore the flash addresses 64 KWords or 128 KBytes address space.

External RAM shares the normal RAM address space after initialization (which can be done in the turnkey action). It is accessible without further changes.

For RAM only there is the special word pair **c@/c!** which operate with the lower half of a stack cell. The upper byte is either ignored or set to 0 (zero).

All other types of external memory need special handling, which may be masked with the block word set.

Input Output

amforth uses character terminal IO. A serial console is used. All IO is based upon the standard words **EMIT/EMIT?** and **KEY/KEY?**. Additionally the word **/KEY** is used to signal the sender to stop. All these words are deferred words in the USER area and can be changed with the **IS** command.

The predefined words use an interrupt driven IO with a buffer for input and output. They do not implement a handshake procedure (XON/XOFF or CTS/RTS). The default terminal device is selected at compile time.

These basic words include a call to the **PAUSE** command to enable the use of multitasking.

Other IO depend on the hardware connected to the micro controller. Code exists to use LCD and TV devices. CAN, USB or I2C are possible as well. Another use of the redirect feature is the following: consider some input data in external EEPROM (or SD-Cards). To read it, the words **KEY** and **KEY?** can be redirected to fetch the data from them.

Strings

Strings can be stored in two areas: RAM and FLASH. It is not possible to distinguish between the storage areas based on the addresses found on the data stack, it's up to the developer to keep track.

Strings are stored as counted strings with a 16 bit counter value (1 flash cell) Strings in flash are compressed: two consecutive characters (bytes) are placed into one flash cell. The standard word **S"** copies the string from the RAM into flash using the word **S,**.

Hardware

Controller

Amforth is designed to run on AVR Atmega and MSP 430 micro controllers. It requires 8KB flash memory for the basic system.

The ATtiny micro controllers and a few ATmega types lack the minimum flash capacity. The ATtiny's lack some machine instructions as well.

AVR8

The AVR8 platform cover the Atmega microcontrollers from Atmel. They are 8-bit systems. Amforth emulates a 16-bit forth on them.

Bootloader Support

Most AVR8 bootloaders will not work with amforth since they do not provide an application programming interface to rewrite a single flash cell. The default setup will thus replace any bootloader found with some core routines.

It is possible to change the word `!i` to use an API and work with existing bootloaders. `!i` is a deferred word that can be re-targeted to more advanced words that may do address range checks, write success checks or simply turn on/off LEDs to visualize the flash programming.

Fuses

Amforth uses the self programming feature of the ATmega micro controllers to work with the dictionary. It is ok to use the factory default settings plus the changes for the oscillator settings. It is recommended to use a higher CPU frequency to meet the timing requirements of the serial terminal.

Fuses are the main cause for problems with the flash write operations. If the !i operation fails, make sure that the code for it is within the boot loader section. It is recommended to make the bootloader section as large as the NRWW section, otherwise the basic machine instruction spm may fail silently and the controller becomes unresponsive.

CPU – Forth VM Mapping

The Forth VM has a few registers that need to be mapped to the microcontroller registers. The mapping has been extended over time and may cover all available registers. The actual coverage depends on the amount of additional packages. The default settings are shown in the table register_mappings.

Register Mapping

Forth Register	ATmega Register(s)
W: Working Register	R22:R23
IP: Instruction Pointer	XH:XL (R27:R26)
RSP: Return Stack Pointer	SPH:SPL
PSP: Parameter Stack Pointer	YH:YL (R29:R28)
UP: User Pointer	R4:R5
TOS: Top Of Stack	R24:R25
X: temporary register	ZH:ZL (R31:R30)

Extended Forth VM Register Mapping

Forth Register	ATmega Register(s)
A: Index and Scratch Register	R6:R7
B: Index and Scratch Register	R8:R9

In addition the register pair R0:R1 is used internally e.g. to hold the the result of multiply operations. The register pair R2:R3 is used as the zero value in many words. These registers must never be changed.

The registers from R10 to R13 are currently unused, but may be used for the VM extended registers X and Y sometimes. The registers R14 to R21 are used as temporary registers and can be used freely within one module as temp0 to temp7.

The forth core uses the T Flag in the machine status register SREG for signalling an interrupt. Any other code must not change that bit.

Core System

Threading Model AmForth implements the classic indirect threaded variant of forth. The registers and their mappings are shown in table *Register Mapping*.

Inner Interpreter For the indirect threading model an inner interpreter is needed. The inner interpreter does the interrupt handling too. It repeatedly reads the cell, the `IP` points to, takes this number as the address for the next code segment and jumps to that code. It is expected that this code segment does a jump back to the inner interpreter (NEXT). The `IP` is incremented by 1 just before the jumps are done to get the next cell.

```
Check_Interrupt
W  <- [IP]   ; read at IP
IP <- IP+1   ; advance IP
X  <- [W]    ; EXECUTE phase, W points to execution token
JMP [X]      ; read execution token and execute its code
```

NEXT The NEXT routine is the core of the inner interpreter. It does the mapping between the execution tokens and the corresponding machine code. It consists of 4 steps which are executed for every forth word.

The first step is to check whether an interrupt needs to be handled. It is done by looking at the **T** flag in the machine status register. If it is set, the code jumps to the interrupt handling part.

The next step is to read the cell the **IP** points to and stores this value in the W register. For a COLON word W contains the address of the code field.

The 3rd step is to increase the **IP** register by 1.

The 4th step is the EXECUTE step.

EXECUTE This operation is the JUMP. It reads the content of the cell the **W** register points to. The result is stored in the scratch pad register **X**. The data in **X** is the address of the machine code to be executed in the last step. This step is used by the forth command **EXECUTE** too. The forth command does not get the address of the next destination from the current **IP** but from the data stack.

This last step finally jumps to the machine code pointed to by the **X** scratch pad register.

DO COLON DO COLON (aka NEST) is the subroutine call. It pushes the **IP** onto the return stack. It then increments **W** by one flash cell, so that it points to the body of the (colon) word, and sets **IP** to that value. Then it continues with **NEXT**, which begins executing the words in the body of the (parent) colon word. Note that **W** points to the execution token of the current word, so W+1 points to the parameter field (body) of the forth word.

```
push IP
IP <- W+1
JMP NEXT
```

EXIT The code for EXIT (aka UNNEST) is the return from a subroutine. It is defined in the forth word **EXIT** in the dictionary. It reads the **IP** from the return stack and jumps to NEXT. The return stack pointer is incremented by 2 (1 flash cell).

```
pop IP
JMP NEXT
```

Stacks

Data Stack The data stack uses the CPU register pair **YH:YL** as its data pointer. The Top-Of-Stack element (TOS) is in a register pair. Compared to a straight forward implementation this approach saves code space and gives higher execution speed (approx 10-20%). Saving even more stack elements does not really provide a greater benefit (much more code and only little speed enhancements).

The data stack starts at a configurable distance below the return stack (RAMEND) and grows downward.

Return Stack The Return Stack is the hardware stack of the controller. It is managed with push/pop assembler instructions. The default return stack starts at RAMEND and grows downward.

Interrupts

Amforth routes the low level interrupts into the forth inner interpreter. The inner interpreter switches the execution to a predefined word if an interrupt occurs. When that word finishes execution, the interrupted word is continued. The interrupt handlers are completely normal forth colon words without any stack effect. They do not get interrupted themselves.

The processing of interrupts takes place in two steps: The first one is the low level part. It is called whenever an interrupt occurs. The code is the same for all interrupts. It takes the number of the interrupt from its vector address and stores this in a CPU register. Then returns with **RET**.

The second step does the inner interpreter. It checks whether the CPU register dedicated for interrupt handling has a non-NULL content. If so it switches to interrupt handling at forth level. This approach has a penalty of 2 CPU cycles for checking and skipping the branch instruction to the isr forth code if no interrupt occurred.

If an interrupt is detected, the forth VM clears the register and continues with the word **ISR-EXEC**. This word reads the currently active interrupt number and calls the associated execution token. When this word is finished, the word **ISR-END** is called. This word clears the interrupt flag for the controller (**RETI**).

This interrupt processing has two advantages: There are no lost interrupts (the controller itself disables interrupts within interrupts and re-transmits newly discovered interrupts afterwards) and it is possible to use standard forth words to deal with any kind of interrupts.

Interrupts from some hardware sources (e.g. the usart) need to be cleared from the Interrupt Service Routine. If this is not done within the ISR, the interrupt is re-triggered immediately after the ISR returned control.

The downside is a relatively long latency since the the forth VM has to be synchronized with the interrupt handling code in order to use normal colon words as ISR. This penalty is usually small since only words in assembly can cause the delay.

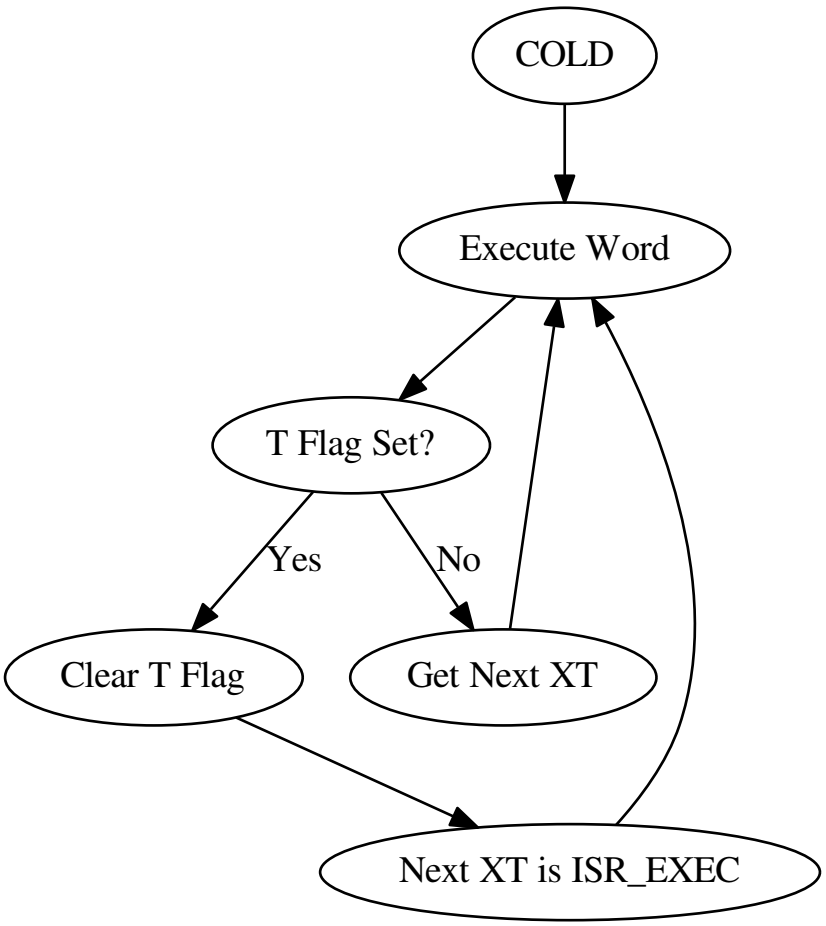

See also:

Interrupt Service Routines Interrupt Critical Section

Dictionary Management

The dictionary can be seen from several points of view. One is the split into two memory regions: NRWW and RWW flash. This is the hardware view. NRWW flash cannot be read during a flash write operation, NRWW means Non-Read-While-Write. This makes it impossible to change there anything at runtime. On the other hand is this the place, where code resides that can change the RWW (Read-While-Write) part of the flash. For AmForth, the command **`!i`** does this work: It changes a single flash cell in the RWW section of the flash. This command hides all actions that are necessary to achieve this.

The NRWW section is usually large enough to hold the interpreter core and most (if not all) words coded in assembly (not to be confused with the words that are hand-assembled into a execution token list) too. Having all of them within a rather small memory region makes it possible to use the short-ranged and fast relative jumps instead of slower full-range jumps necessary for RWW entries.

Another point of view to the dictionary is the memory allocation. The key for it is the dictionary pointer **`dp`**. It is a EEPROM based VALUE that stores the address of the first unused flash cell. With this pointer it is easy to allocate or free flash space at the end of the allocated area. It is not possible to maintain "holes" in the address range. To append a single number to the dictionary, the command `,` is used. It writes the data and increases the DP pointer accordingly:

```
\ ( n -- )
: , dp !i dp 1+ to dp ;
```

To free a flash region, the DP pointer can be set to any value, but a lot of care has to be taken, that all other system data is still consistent with it.

The next view point to the dictionary are the wordlists. A wordlist is a single linked, searchable list of entries. All wordlists create the forth dictionary. A wordlist is identified by its `wid`, an EEPROM address, that contains the address of the first entry. The entries themselves contain a pointer to the next entry or ZERO to indicate End-Of-List. When a new entry is added to a list it will be the first one of this wordlist afterwards.

A new wordlist is easily created: Simply reserve an EEPROM cell and initialize its content with 0:

```
: wordlist ( -- wid )
    ehere 0 over !e
    dup cell+ to ehere ;
```

This `wid` is used to create new entries. The basic procedure to do it is **`create`**:

```
: create ( "name" -- )
  (create) reveal
  postpone (constant) ;
```

`(create)` parses the current source to get a space delimited string. The next step is to determine, into which wordlists the new entry will be placed and finally, the new entry is created, but it is still invisible:

```
: (create) ( -- )
    parse-name wlscope
    dup newest cell+ ! \ keep the wid
    header newest !    \ keep the nt
;
```

The **`header`** command starts a new dictionary entry. The first action is to copy the string from RAM to the flash. The second task is to create the link for the wordlist management

```
: header ( addr len wid -- NT )
 dp >r
 \ copy the string from RAM to flash
 r> @e ,
 \ minor housekeeping
;
```

`smudge` is the address of a 4 byte RAM location, that buffers the access information. Why not not all words are immediately visible is something, that the forth standard requires. The command **`reveal`** un-hides the new entry by adjusting the content of the wordlist identifier to the address of the new entry:

```
: reveal ( -- )
   newest cell+ @ ?dup if \ check if valid data
   newest  @ swap !e      \ update the head of wordlist
   0 newest cell+ !       \ invalidate
   then ;
```

The command **`wlscope`** can be used to change the wordlist that gets the new entry. It is a deferred word that defaults to **`get-current`**.

The last command **`postpone (constant)`** writes the runtime action, the execution token (XT) into the newly created word. The XT is the address of executable machine code that the forth inner interpreter calls (see *Inner Interpreter*). The machine code for **`(constant)`** puts the address of the flash cell that follows the XT on the data stack.

Word Lists and Environment Queries

Word lists and environment queries are implemented using the same structure. The word list identifier is a EEPROM address that holds the name field address of the first word in the word list.

Environment queries are normal colon words. They are called within **environment?** and leave there results at the data stack.

find-name (und **find** for counted strings) uses an array of word list identifiers to search for the word. This list can be accessed with **get-order** as well.

Wordlist Header Wordlists are implemented as a single linked list. The list entry consists of 4 elements:

- Name Field (NF) (variable length, at least 2 flash cells).
- Link Field (LF) (1 flash cell), points to the NFA of the next element.
- Execution Token (XT) (1 flash cell)
- Parameter Field (Body) (variable length)

The wording is some mixture of old style fig-forth and the more modern variants. The order makes it possible to implement the list iterators (**search-wordlist** and **show-wordlist**) is a straight forward way.

The name field itself is a structure containing the flags, the length information in the first flash cell and the characters of the word name in a packed format afterwards.

The anchor of any wordlist points to the name field address of the first element. The last element has a zero link field content. The lists are created from lower addresses to higher ones, the links go from higher addresses backwards to lower ones.

Memories

Flash The flash memory is divided into 4 sections. The first section, starting at address 0, contains the interrupt vector table for the low level interrupt handling and a character string with the name of the controller in plain text.

The 2nd section contains the low level interrupt handling routines. The interrupt handler is very closely tied to the inner interpreter. It is located near the first section to use the faster relative jump instructions.

The 3rd section is the first part of the dictionary. Nearly all colon words are located here. New words are appended to this section. This section is filled with FFFF cells when flashing the controller initially. The current write pointer is the DP pointer.

The last section is identical to the boot loader section of the ATmegas. It is also known as the NRWW area. Here is the heart of amforth: The inner interpreter and most of the words coded in assembly language.

FLASH Structure Overview The reason for this split is a technical one: to work with a dictionary in flash the controller needs to write to the flash. The ATmega architecture provides a mechanism called self-programming by using a special instruction and a rather complex algorithm. This instruction only works in the boot loader/NRWW section. amforth uses this instruction in the word I!. Due to the fact that the self programming is a lot more then only a simple instruction, amforth needs most of the forth core system to achieve it. A side effect is that amforth cannot co-exist with classic boot loaders. If a particular boot loader provides an API to enable applications to call the flash write operation, amforth can be restructured to use it. Currently only very few and seldom used boot loaders exist that enable this feature.

Atmegas can have more than 64 KB Flash. This requires more than a 16 bit address, which is more than the cell size. For one type of those bigger atmegas there will be an solution with 16 bit cell size: Atmega128 Controllers. They can use the whole address range with an interpretation trick: The flash addresses are in fact not byte addresses but word addresses. Since amforth does not deal with bytes but cells it is possible to use the whole address range with a 16 bit cell. The Atmegas with 128 KBytes Flash operate slightly slower since the address interpretation needs more code to access the flash (both read and write). The source code uses assembly macros to hide the differences.

An alternative approach to place the elements in the flash shows picture . Here all code goes into the RWW section. This layout definitely needs a routine in the NRWW section that provides a cell level flash write functionality. The usual boot loaders do not have such an runtime accessible API, only the DFU boot loader from atmel found on some USB enabled controllers does.

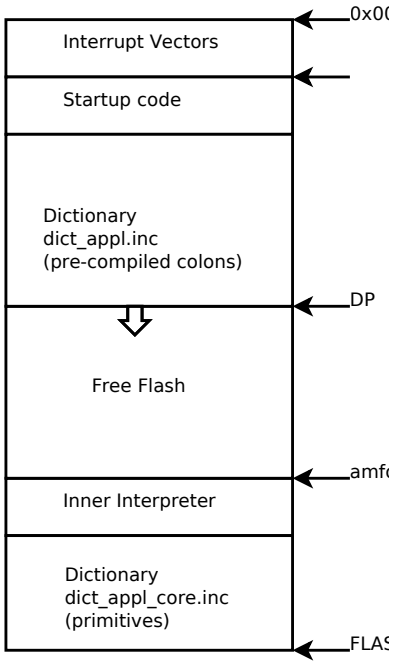

Fig. 3.1: Default Flash Structure

Alternative FLASH Structure The unused flash area beyond 0x1FFFF is not directly accessible for amforth. It could be used as a block device.

Flash Write The word performing the actual flash write operation is **`I!`** (i-store). This word takes the value and the address of a single cell to be written to flash from the data stack. The address is a word address, not a byte address!

The flash write strategy follows Atmel's appnotes. The first step is turning off all interrupts. Then the affected flash page is read into the flash page buffer. While doing the copying a check is performed whether a flash erase cycle is needed. The flash erase can be avoided if no bit is turned from 0 to 1. Only if a bit is switched from 0 to 1 must a flash page erase operation be done. In the fourth step the new flash data is written and the flash is set back to normal operation and the interrupt flag is restored. The whole process takes a few milliseconds.

This write strategy ensures that the flash has minimal flash erase cycles while extending the dictionary. In addition it keeps the forth system simple since it does not need to deal with page sizes or RAM based buffers for dictionary operations.

EEPROM

The built-in EEPROM contains vital dictionary pointer and other persistent data. They need only a few EEPROM cells. The remaining space is available for user programs. The easiest way to use the EEPROM is a **`VALUE`**. There intended design pattern (read often, write seldom) is like that for the typical EEPROM usage. More information about values can be found in the recipe *Values*.

Another use for EEPROM cells is to hold execution tokens. The default system uses this for the turnkey vector. This is an EEPROM variable that reads and executes the XT at runtime. It is based on the DEFER/IS standard. To define a deferred word in the EEPROM use the Edefer definition word. The standard word IS is used to put a new XT into it.

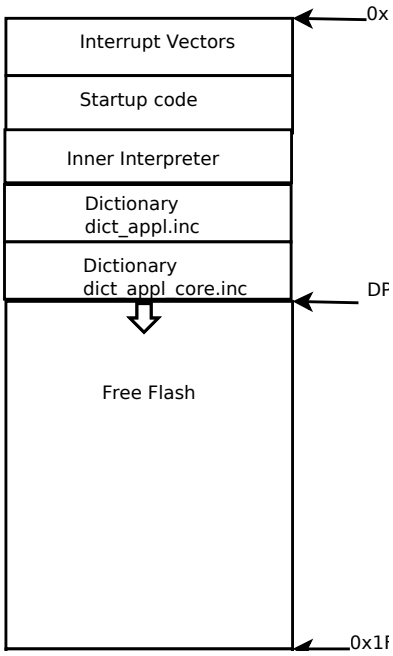

Fig. 3.2: Alternative Flash Structure

Low level space management is done through the the EHERE variable. This is not a forth value but a EEPROM based variable. To read the current value an **@e** operation must be used, changes are written back with **!e**. It contains the highest EEPROM address currently allocated. The name is based on the DP variable, which points to the highest dictionary address.

RAM

The RAM address space is divided into three sections: the first 32 addresses are the CPU registers. Above come the IO registers and extended IO registers and finally the RAM itself.

amforth needs very little RAM space for its internal data structures. The biggest part are the buffers for the terminal IO. In general RAM is managed with the words **VARIABLE** and **ALLOT**.

Forth defines a few transient buffer regions for various purposes. The most important is PAD, the scratch buffer. It is located 100 bytes above the current HERE and goes to upper addresses. The Pictured Numeric Output is just at PAD and grows downward. The word WORD uses the area above HERE as it's buffer to store the just recognized word from SOURCE.

Ram Structure shows an RAM layout that can be used on systems without external RAM. All elements are located within the internal memory pool.

Another layout, that makes the external RAM easily available is shown in *Alternative RAM Structure*. Here are the stacks at the beginning of the internal RAM and the data space region. All other buffers grow directly into the external data space. From an application point of view there is not difference but a speed penalty when working with external RAM instead of internal.

With amforth all three sections can be accessed using their RAM addresses. That makes it quite easy to work with words like **C@**. The word **!** implements a LSB byte order: The lower part of the cell is stored at the lower address.

For the RAM there is the word **Rdefer** which defines a deferred word, placed in RAM. As a special case there is

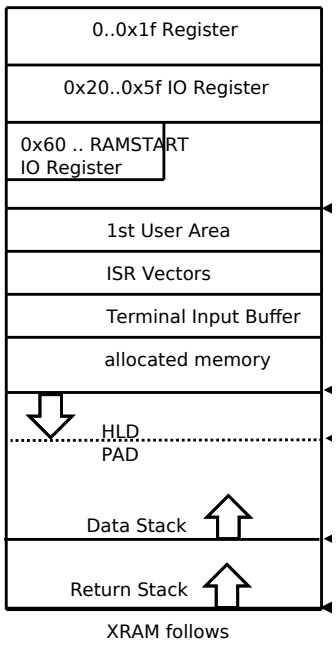

Fig. 3.3: Ram Structure

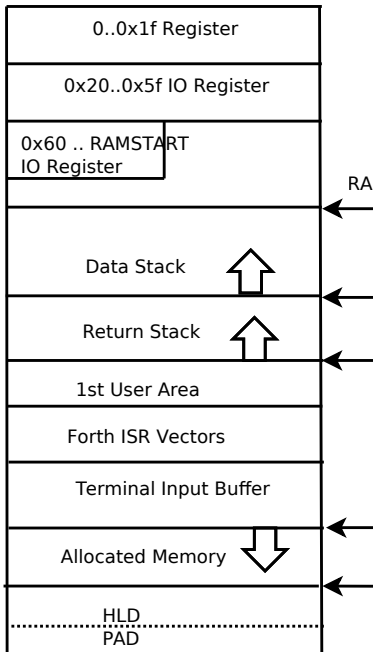

Fig. 3.4: Alternative RAM Structure

the word **Udefer** , which sets up a deferred word in the user area. To put an XT into them the word **IS** is used. This word is smart enough to distinguish between the various Xdefer definitions.

MSP430

The MSP430 is a 16-bit microcontroller from Texas Instruments. The Amforth implementation is based on code from Camelforth by Brad Rodriguez. This code is heavily modified and completely merged with the AVR code from the initial Amforth code base.

This merge affects all higher order word like the interpreter itself. Most low-level stuff remained unchanged however. E.g. the inner interpreter is completely unchanged thus almost all assembly words work as before. To make room in the 8KB sized code segment, many words were removed. Some of them reappear as loadable forth source however. Some other like **, jmp** are gone, since they make no real sense within amforth.

CPU Register Mapping

Standard Use

Forth Register	MSP430 Register
W: Working Register	R6
IP: Instruction Pointer	R5
RSP: Return Stack Pointer	SP (HW Stack)
PSP: Parameter Stack Pointer	R4
UP: User Pointer	R14
TOS: Top Of Stack	R7
X: temporary register	R10
Loop Index	R8
Loop Limit	R9
Y: temporary register	R11
Q: temporary register	R12

The remaining registers are used by the CPU itself (R0-R3).

Extended Forth VM Register Mapping

Forth Register	MSP430 Register(s)
A: Index and Scratch Register	R15
B: Index and Scratch Register	R13

Core System

Threading Model AmForth implements the classic indirect threaded variant of forth. The registers and their mappings are shown in table *CPU Register Mapping*.

Inner Interpreter For the indirect threading model an inner interpreter is needed. On the MSP 430 it almost the same as on the AVR8 platform. There are two major differences.

- the NEXT routine is compiled into each word, there is no central NEXT code.
- It does not support interrupts.

Memory Allocation

The ANS 94 standard defines three major data regions: name space, code space and data space. The MSP430 system architecture uses three memory types too: Flash, RAM and Info Flash. These three memory types share a common address space. The Info Flash is copied to a pre-defined RAM region, that can be written back using **SAVE**. This write back is *not* performed automatically. That is a major difference to the EEPROM based configuration area in the AVR8.

User Area

The User Area is a special RAM storage area. It contains the USER variables and the User deferred definitions. Access is based upon the value of the user pointer UP. It can be changed with the word **UP!** and read with **UP@** . The UP itself is stored in a register pair.

The size of the user area is determined by the size the system itself uses plus a configurable number at compile time. For self defined tasks this user supplied number can be changed for task local variables.

The first USER area is located at the first data address (usually RAMSTART).

Address offset (bytes)	Purpose
0	Multitasker Status
2	Multitasker Follower
4	RP0
6	SP0
8	SP (used by multitasker)
10	HANDLER (exception handling)
12	BASE (number conversion)
14	EMIT (deferred)
16	EMIT? (deferred)
18	KEY (deferred)
20	KEY? (deferred)
22	SOURCE (deferred)
24	>IN
26	REFILL (deferred)

The User Area is used to provide task local information. Without an active multitasker it contains the starting values for the stackpointers, the deferred words for terminal IO, the BASE variable and the exception handler.

The multitasker uses the first 2 cells to store the status and the link to the next entry in the task list. In that situation the user area is/can be seen as the task control block.

Dictionary Management

The dictionary has all words and code. It is located in the flash region. The memory is managed with the **dp** dictionary pointer. It is a configuration RAM variable.

```
\ ( n -- )
: , dp !i dp 1 +! ;
```

Wordlists too use the configuration RAM. The wordlist identifier is the address of a RAM cell, that contains the link to the first word in the list.

```
: wordlist ( -- wid )
    infodp @ 0 over !
    dup cell+ infodp !e ;
```

The **header** command starts a new dictionary entry. It creates the same layout as the AVR8 but differs in the way, the header is built.

```
: header ( addr len wid -- NT )
  @ ,       \ link field
  $ff c,    \ flag field
  ihere >r  \ Name Token NT
  s,        \ copy the string from RAM to flash
  r>        \
;
```

All higher level structures are identical.

Memories

Flash Flash contains the dictionary. The actual placement depends on the device type but usually the amforth core system is at the higher addresses. User specific words start at flash start.

Reqriting flash pages is only possible if enough RAM ressources are available to buffer a whole page. Since a page is usually 512 bytes in size, the smaller device types like the G2553 cannot rewrite flash cells.

Info Flash A 128 bytes segment called INFO D is used for configuration data. This block is copied to RAM at startup. Any changes to the data are applied to this RAM copy. Only an explicit command **SAVE** writes the configuration settings back to the info flash.

RAM RAM is used for the info flash copy, data like the USER area, buffers such as the terminal input buffer and the acutal user data. Technically it would be possible to place the dictionary here too since nothing in the MSP430 architecture prevents this.

FRAM Some devices use FRAM instead of flash memory. While not strictly necessary, they too require the **save** command to make all changes to the dictionary permanent. This memory supports the **create** command.

Source Organization

Overview

amforth is written in assembler. Only a few are actually assembly words, most are pre-compiled forth code. There are three major directories containing the code: `avr8`, `msp430` and `common`. Each contain a number of subdirectories like `lib` and `words` that contain actual source files. Almost every word uses its own source file with a descriptive name. These elementary source files are collected in include file sets, called dictionary files. Depending on the controller type, different dictionary file sets should be used. Most of the decisions are made automatically by using the single top-level file `amforth.asm`.

The assemblers used suuport a list of include directories which is used in order. That makes it possible to have an application specific `words` directory that may contain the same file names as the amforth provided ones that take precedence during the assembly process. Likewise the controller specific directories are searched before the `common` directory.

Device Settings

Every Atmega has its own specific settings. They are based on the official include files provided by Atmel and define the important settings for the serial IO port (which port and which parameters), the interrupt vectors and some macros.

Adapting another ATmega micro controller is as easy as copy and edit an existing file from a similar type.

The last definition is a string with the device name in clear text. This string is used within the word **VER**.

Application Code

Every build of amforth is bound to an application. There are a few sample applications, which can be used either directly (AVR Butterfly) or serve as a source for inspiration (template application).

The structure is basically always the same. First the file `preamble.inc` has to be included. After that some definitions need to done: The size of the Forth buffers, the CPU frequency, initial terminal settings etc. As the last step the amforth core is included.

For a comfortable development cycle the use of a build utility such as **make** or **ant** is recommended. The assembler needs a few settings and the proper order of the include directories.

Tools

Host

There a few number of tools on the host side (PC) that are specifically written to support amforth. They are written in script languages like Perl and python and should work on all major operating systems. They are not needed to use amforth but may be useful.

Part description Converter

The **pd2amforth.pl** script reads a part description file in XML format (comes with the Atmel Studio package) and produces the controller specific `devices/controllername/*` files.

Documentation

The tool **makerefcard** reads the assembly files from the **words** subdirectory and creates a reference card. The resulting LaTeX file needs to be processed with **latex** to generate a nice looking overview of all words available in the amforth core system.

The command **make-htmlwords** creates the linked overview of all words on the amforth homepage.

Uploader

To transfer forth code to the micro controller some precautions need to taken. During a flash write operation all interrupts are turned off. This may lead to lost characters on the serial line. One solution is to send very slowly and hope that the receiver gets all characters. A better solution is to send a character and wait for the echo from the controller. This may sound awfully slow at the glance but it turned out to be a fast and reliable strategy.

An example for the first strategy can be used with the program **ascii-xfer**. Calling it with the command line parameters

```
$ ascii-xfr -s -c $delayChar -l $delayLine file > $tty
```

will work but the upload of longer files needs a very long time: $delayChar can be 1 or 2 ms, $delayLine around 800 ms.

Uploader++

The powerful Python script **amforth-shell.py** is using echo to regulate uploading. It recognizes Forth comments, single and multi line, and skips uploading them. The shell also features automatic file inclusion via *#include filename.frt* meta commands and, what can save a lot of dictionary space and clutter, it does constant substitution for the AVR register names and the project's own definitions (via a locally provided `appl_defs.frt` file). The shell has much more to offer, please read its script.

Controller

There are a few tools that may be useful on the controller. They are implemented as loadable forth code that may affect internal data and work flows in a non-portable way. In particular are available a profiler (counting calls to words), a call tracer (printing a stack trace while executing the words), a timing utility (**benchme**), a few memory dump tools and a **see** that may be useful to revert the compilation process (gets some forth code from compiled words).

See also:

Profiler Debug Shell Watcher Tracer

CHAPTER

FOUR

COMMENTED PROJECTS

A collection of projects using amforth.

Nodes on a RS485 Bus

Author Erich Wälde

Contact amforth-devel@lists.sourceforge.net

Date 2015-04-19

Contents

1 Abstract

The cookbook style recipes presented below are interconnected by the desire to create a solution connecting several controller nodes together by rs485 network for periodic data collection. A few decisions have been taken upfront:

- The rs485-bus is wired up as "simplex" (not duplex).

- There is exactly one node on the rs485 network acting as bus-master (the data collecting Linux system) and initiating any data transfer.
- Every node has to exlicitly switch its bus transceiver to "send" mode when writing data onto the bus.
- There must be a means to address one node whereas all the other nodes must remain silent.

Substantial parts of this solution were inspired or recycled from a project published by Lubos Pekny.

The author is running a set of currently 5 data collecting controller nodes on one rs485 bus for several years now. The code provided stable operation so far.

For this article the author decided to "redo everything" in plain amForth, well almost everything, as it turned out.

2 Motivation: The Project "collector"

When starting with microcontrollers years ago I needed to do something with them, that looked useful at least to me. So very soon I started to deal with sensors to measure temperature, pressure, and humidity of air. The classical "weather station" project. This worked, but soon I wanted to have the values not only displayed but rather collected — some day nice graphs would be interesting, or so I thought. So I connected a small single-board-computer [1] to the only one controller with a serial cable. This worked for a long time.

Later I had the idea to collect temperatures at other points in the house as well. I could have added more sensors and long cables to the only one controller, but instead I decided to add another controller at the end of a long cable. Now I needed a way to talk to two (or more) controllers connected "somehow" the the single board computer. I could have added more serial interfaces, one for each controller, but I didn't like the idea. Instead I decided to connect two (or more) controllers via one long cable using the RS485-Bus specification.

The RS485-Bus is an electrical specification. A (possibly twisted) pair of wires is used to connect two nodes. The signal is differential, the difference in potential between the two wires is used as information. That way the whole setup is fairly immune against noise, as this normally adds the same shift in potential to both wires. The standard is good for a distance up to 1200 m, but should work much longer distances with slow data rates and proper termination.

In order to exchange information on the RS485-bus the same timing and encoding is used as on a normal serial interface (RS232). The idle levels are interpreted as 1, the first bit is the start bit and always 0, then 8 data bits follow, and then one or more stop bits are sent. The stop bits are also 1 and correspond to the idle levels. So there is nothing new here.

However, if several nodes are on the bus, to which one am I talking? And if it is the wrong one, how do I "address" the correct one? In order to distinguish addresses (or control bytes) from ordinary data, some agreement has to be established, for example

- Bytes with the most significant bit set are treated as addresses or control bytes
- Bytes with the most significant bit cleared are treated as ordinary data

If the bytes `0x00 .. 0x7f` (the lower half of the ascii table) are sufficient for all data exchange, then 8 data bits are still good. If not, 9 data bits can be used in many cases. AVR controllers provide that possibility. There is a project using 9bit communication on Linux as well (uLan), Links section.

In my case I decided to transfer all information as ascii strings, e.g.

```
7F01:8,22.40,22.87,23.24
```

where `7F` is the station address (stationID) in hex, `01` is the sensor number on that node (also in hex), and after the colon a list of 4 numerical values, their precise meaning being entirely irrelevant at this point. The main advantage is that I can just read everything on the bus in clear with little technical overhead.

Currently I run a set of 5 controllers with a variety of sensors:

- temperature and humidity (indoors and outdoors), pressure of air
- voltage of an accumulator providing power to a remote system
- distance (ultrasonic range finder) which translates to the amount of water in a tank

- counts of meters (electricity, water, natural gas)

The "collector" is a perl script running on the single board computer and collecting the data from the controllers every 2 or 10 minutes. This program acts as the bus master, the other nodes do not initiate any data exchange. The data is then accumulated in a sqlite database. A "viewer" perl script will then produce graphs of selected values over time. Other options are possible, of course.

3 Hardware Requirements

All controller nodes need to have a RS485-transceiver. The transceiver needs 3 connections to the controller:

1. TX –> Data Out
2. RX <– Data In
3. Port D7 –> Write/Read select (idle = read = low)

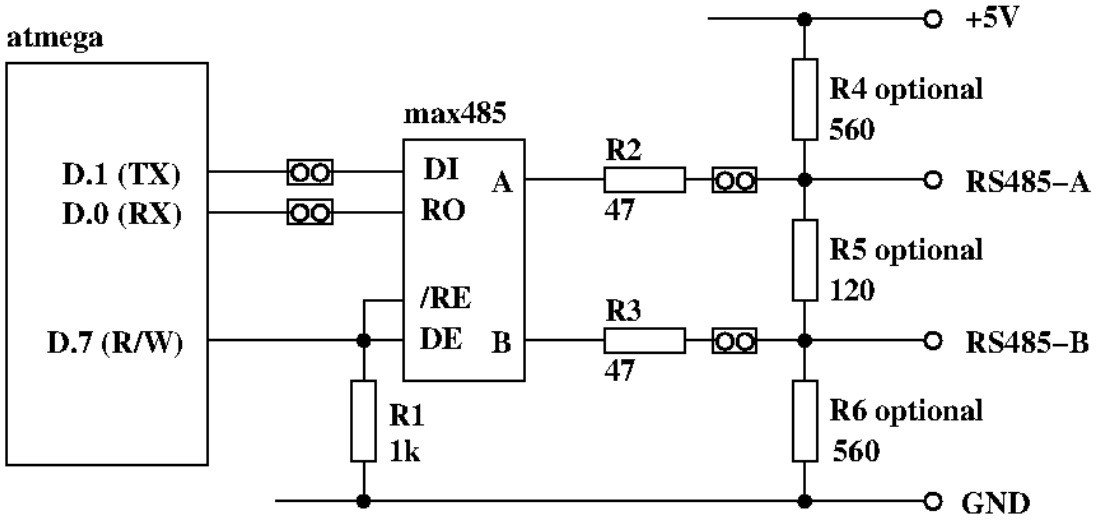

An RS232 – RS485 converter of some sort is needed to connect the serial interface of the collector computer to the bus. USB – RS485 dongles are available as well. Please note, that the connector should not produce a local echo of the bytes transmitted, or software needs to take care of the double echo. The controllers are sending an echo character as well, this serves as handshake when uploading forth code, too.

Power supply can be local to any node, but serving power on 2 more wires is also possible. When having long cables +12V supply voltage and step down converters on every board seem like a good idea.

4 Software Requirements

1. Any node should be quiet and not write anything to the bus unless explicitly requested to do so. This explicit request translates into some sort of addressing. Preventing any output is most easily achieved by changing `emit`.
2. Bytes `0x00 .. 0x7f` are considered *normal* data, bytes `0x80 .. 0xff` are considered adresses (or control bytes).
3. every node needs to have an address or stationID assigned
4. The controllers make use of the so called multi processor communication (MPC) mode to ignore traffic between other nodes already in hardware.
5. a write operation to the bus must assert the W/R pin to write before transmission.

6. Upon completion of the (asynchronous) data transmit the W/R pin has to be released, e.g. automatically by using the transmit complete interrupt.
7. The implementation should be in Forth entirely. A few exceptions showed up during implementation.
8. If a node is power cycled, nothing weird should happen on power up. Especially nothing should be written to the bus at all.
9. a modified prompt shall include the address (stationID) of the node at the other end of the communication. This is solely to provide immediate visible feedback, it is not needed for proper communication.
10. While experimenting it turned out that sometimes more than one controller is in normal mode. They will produce what I call "echo loops". The output (mostly error messages) of one node will trigger more output (error messages) of the other node. I decided to implement harsh measures: whenever command line will produce an error message, then instead put the node back to quiet mode.

5 Implementation Plan

In order to achieve the above goals, a set of mutually independant things were implemented.

1. **`stationID`**, prompts

   This is to satisfy requirements 3 and 9. The code is fairly simple, even short.

   `stationID` is an eeprom backed value with a cache place in RAM.

   The prompt itself is produced by **`.ready`**. This is a deferred word and therefore can be overridden easily by another function. So we implement a new function **`p_id_rd`** which will then be registered into the deferred function **`.ready`**.

2. **`-emit`** / **`+emit`**

   In order to prevent **any** output from the controller, I chose to make **`emit`** point to **`drop`** rather than **`tx`**. **`-emit`** will take care of this. This word will be called in the next part at startup time.

3. rs485 read/write pin handling

   One pin on the controller has to be selected to drive the read/write-pin of the transceiver. The idle state should be low (*0*) or *read*, which is achieved by a pull-down resistor.

   - provide constants to declare the selected pin
   - switch the pin to output on startup
   - set the pin to write (*1*) before transmission
   - release the pin to read (*0*) upon completion. Use the transmit complete interrupt to achieve this.

   We can now write to and read from the RS485 bus. We can handle only one controller so far.

4. mpc — multi processor communication

   This is the most complex part.

   - set quiet mode set the serial interface to *7N2* (7 data bits, no parity bit, 2 stop bits), set the *MPCM0* bit in register *UCSR0C*
   - when receiving a byte with the most significant bit set, inspect the byte and decide whether this is the local address or not
   - if not, remain in quiet mode
   - if yes, then switch the serial interface to normal mode (*8N1*) and handle all incoming data
   - set normal mode: set the serial interface to *8N1*, clear the *MPCM0* bit in register *UCSR0C*

   It turned out that the function **`usart_rx_isr`** is implemented in assembly and registered as a *low* level interrupt service routine (ISR). This prevents overriding the registered interrupt service routine with another function. I decided to change this and make **`usart_rx_isr`** a forth level routine (assembly change 2) and register it as a *high* level interrupt. This way the ISR can be replaced by some other function.

Unsurprisingly replacing the ISR needs explicit access to the ring buffer that the original ISR is using. It is accessed by **key** as well and should not change. So I added forth level headers to make the space in RAM available as forth constants/variables (assembly change 3)

5. recognizer: go quiet if command not found

   amForth provides recognizers. There is a list of them, which can be changed. The first in the list is **rec:word**, it will try to find the token in the word list. If it fails, the next one in the list is called: **rec:num**. It will try to parse the input token as a number. If it fails the list is exhausted and the final **r:fail** will be called to issue an error message and do some cleanup.

   I decided to add a third recognizer to the end of the list named **rec:quiet**. It will not parse the input token again, but clean up the arguments. Then it will set the controller to quiet mode (call **-emit +mpc7**) and signal success rather than error. This way the pointer in **r:fail** is not called.

6. startup / turnkey

   In the end all of the above things need to be put together to ensure correct startup and initialization of all parts involved. Pay attention to turnkey and power cycle.

6 Code

This code was re-developed and tested on an atmega644p running amForth 5.5.

6.1 start

The remainder of this article assumes that we have a working setup derived from the

```
amforth/releases/5.5/appl/template
```

directory. Set appropriate values for the controller type, crystal frequency, and baud rate to appropriate values for your board.

- Makefile

```
MCU=atmega644p
```

- main.asm

```
.equ F_CPU = 11059200
.set BAUD=115200
```

Now we are at the point where the controller should talk to us on the serial interface using a terminal program, e.g. minicom:

```
Welcome to minicom 2.7

OPTIONS: I18n
Compiled on Jan  1 2014, 09:30:18.
Port /dev/ttyUSB1, 16:46:00

Press CTRL-A Z for help on special keys

amforth 5.5 ATmega644P
>
```

6.2 changing the prompts

With the release 6.3 and newer the appearance of the prompt can be changed if we so desire:

```
amforth 6.3 ATmega644P
> variable (p_rd)
ok
> ' .ready defer@ (p_rd) !
ok
> : new_p_rd  cr ." --new> " ;
 ok
> ' new_p_rd is .ready
 ok
--new> 1 3 + .
4  ok
--new> (p_rd) @ is .ready
 ok
>
```

This will be used in the next step to display the content represented by **stationID** in the ready-prompt.

6.3 stationID

StationID is a value, permanently stored in EEPROM and copied to a RAM location on startup. So we need to load the appropriate word **Evalue**:

```
include lib/forth2012/core/value.frt
```

After that we are able to create a value, the content of which is backed in EEPROM:

```
$007f Evalue stationID
```

With this in place we are now in a position to create a new function implementing a new prompt. In order to make it always look the same (two digits, leading zeros) we add the word **u0.r** to the dictionary in `dict_appl.inc` (please note the leading dot and the quotes, since this is assembly syntax):

```
.include "words/uzerodotr.asm"
```

reassemble and reflash amForth. Then define the new word **p_id_rd**

```
: p_id_rd
  cr
  base @
  hex
  [char] ~ emit
  stationID 2 u0.r
  [char] > emit
  space
  base !
;
```

We should also take care to save and restore the content of **base**, since I decided to print out the value of **stationID** in hexadecimal. Using the new things should work like this:

```
amforth 6.3 ATmega644P ok
> stationID decimal .
127  ok
> p_id_rd

~7F>  ok
> ' p_id_rd is .ready
 ok
~7F> $42 to stationID
 ok
~42>
```

The value `$007F` is the highest address available for the above mentioned 7-bit addressing scheme, so I chose it as the default. The exact value can be changed here or overwritten later when loading the code with something like

```
$42 to stationID
```

6.4 emit-on-off

In order to prevent the controller from writing to the rs485 bus **unless** explicitly requested, I decided to defer **`emit`** to **`drop`** just to make sure. This requires two fairly simple words

```
variable old-emit
' emit defer@ old-emit !
: -emit
  ['] emit defer@ old-emit !
  ['] drop is emit
;
: +emit
  old-emit @ is emit
;
```

After loading the code we can test this:

```
amforth 6.3 ATmega644P ok
~42>
~42> : hi ." howdy, mate!" cr ;
 ok
~42> hi
howdy, mate!
 ok
~42> -emit hi +emit
 ok
```

6.5 adding rs485 r/w handling

In order to drive the rs485 transceiver, we need to implement the following things:

1. select W/R pin

This pin needs to be selected, initialized as output and set to low.

```
$2B constant RS485_PORT          \ memory mapped
$2A constant RS485_DDR           \ .
$80 constant RS485_PIN_MASK
: rs485-pin-output
  RS485_DDR c@ RS485_PIN_MASK or RS485_DDR c!
;
```

Of course the functions in `lib/bitnames.frt` could be used as well, but for the argument of smaller dependencies, I decided to implement this directly.

2. set W/R pin high (write) or low (read)

Two simple functions will do this:

```
: rs485-write
  RS485_PORT c@ RS485_PIN_MASK or RS485_PORT c!
;
: rs485-read
  RS485_PORT c@ RS485_PIN_MASK invert and RS485_PORT c!
;
```

3. set W/R pin to *write* (*1*) before sending a byte

   Before sending any byte, we need to set the W/R pin high. So we reimplement **tx-poll**, the function that transfers one byte to the serial interface.

```
$C6 constant UDR0 \ usart0 data register
: rs485-tx-poll ( c -- )
  begin  tx?-poll  until
  rs485-write
  UDR0 c!
;
```

4. release W/R pin upon transfer completion

   After sending the byte, the W/R pin should be released to zero. This happens *some* time after initiating a transfer. However, the Atmel engineers have anticipated this problem and provided the *transfer complete* interrupt for our convenience.

```
: tx-complete-isr
  RS485_PORT c@ RS485_PIN_MASK invert and RS485_PORT c!
;

$2C  constant USART0__TXAddr \ USART0, Tx Complete
$40  constant UCSR0B_TXCIE0
$C1  constant UCSR0B
: +rs485
  rs485-pin-output
  rs485-read
  ['] tx-complete-isr USART0__TXAddr int!
  ['] rs485-tx-poll is emit
  UCSR0B c@ UCSR0B_TXCIE0 or UCSR0B c!
;
: -rs485
  ['] noop USART0__TXAddr int!
  ['] tx-poll is emit
  UCSR0B c@ UCSR0B_TXCIE0 invert and UCSR0B c!
;
```

   The functions **+rs485** and **-rs485** enable and disable the whole rs485 bus connection. Apart from changing the deferred word **emit** and registering the interrupt service routine to the *transfer complete interrupt*, the interrupt itself must be enabled in the register `UCSR0B`.

At this point we have everything in place to connect to the controller via the rs485 bus. **+rs485**` needs to be called during startup, which is the only missing piece at this point.

6.6 mpc 1: making *usart_rx_isr* a forth level word

While working on this particular implemention of my code, namely reimplementation in as much Forth code as possible, I came across a subtle feature of the amForth implementation (as of version 5.5). Interrupt handling in amForth is twofold: the low level part (written in assembly) is basically doing the bookkeeping, clearing the interrupt and then calling into a amForth table of registered functions. This provides the possibility to write interrupt service routines (ISR) in *high level* Forth rather than assembly. Registering your own ISR is a matter of one line:

```
' your-own-isr  Interrupt-Vector-Addr  int!
```

6.6.1 replace *usart_tx_isr* with a Forth word

This part is not particularly difficult, because a Forth equivalent is found already as a comment in the asm file.

```
; forth code:
; : rx-isr USART_DATA c@
;    usart_rx_data usart_rx_in c@ dup >r
;    + !
;    r> 1+ usart_rx_mask and usart_rx_in c!
; ;
; setup with
; ' rx-isr URXCaddr int!
```

I kept the name, but please note that it does not refer to the asm label any more — **usart_rx_isr** is now a proper Forth word.

6.6.2 register the new function as ISR

The new function must be registered somewhere in the startup of amForth, because otherwise there will be no access to the command loop via the serial interface. So in function **applturnkey** we add the equivalent of

```
' usart_rx_isr  USART0__RXAddr  int!
```

just before globally enabling interrupts.

```
; ( -- ) System
; R( -- )
; application specific turnkey action
VE_APPLTURNKEY:
    .dw $ff0b
    .db "applturnkey",0
    .dw VE_HEAD
    .set VE_HEAD = VE_APPLTURNKEY
XT_APPLTURNKEY:
    .dw DO_COLON
PFA_APPLTURNKEY:
    .dw XT_USART

    ; register usart_rx_isr
    .dw XT_DOLITERAL            ; ' usart_rx_isr URXCaddr int!
    .dw XT_USART_RX_ISR
    .dw XT_DOLITERAL
    .dw URXCaddr
    .dw XT_INTSTORE

    .dw XT_INTON
    .dw XT_VER
    .dw XT_EXIT
```

Assembling amForth and programming the controller with these changes must result in an equally usable system as it was before.

6.7 mpc 2: adding mpc after all

Entering MPC mode in this case means configuring the serial interface to *7N2* (7 data bits, no parity bit, 2 stop bits) and setting the `MPCM0` bit in register `USCR0A`.

In that mode, if a data frame is received with the most significant bit cleared (0), the the data frame is silently ignored.

In that mode, if a data frame is received with the most significant bit set (1), then the data frame shows up in register `UDR0`, the data register of the serial interface. An interrupt is generated and the corresponding ISR is called.

All nodes on the bus will inspect the just arrived address byte. If the value of the address byte is the same as the configured node address (also known as **stationID**), only then the serial interface is reconfigured to *8N1*

and the `MPCM0` bit is cleared. This node is then *awake* from a communication point of view. It will receive all following data frames and is expected to act on them.

All other nodes on the bus will keep the *7N2* mode of the serial interface and remain *silent* from a communication point of view.

The *awake* state will not end and must be changed explicitly.

Things that need to be done are

1. provide a few definitions for readability (recycled from `devices/$(MCU)/$(MCU).frt` — make sure to load the correct file for your controller!)

```
$2C  constant USART0__TXAddr \ USART0, Tx Complete
$28  constant USART0__RXAddr \ USART0, Rx Complete
$40  constant UCSR0B_TXCIE0
$C0  constant UCSRA \ UCSR0A, really
$10  constant UCSRA_FE0          \ frame error
$08  constant UCSRA_DOR0         \ data over run
$04  constant UCSRA_UPE0         \ parity error
$01  constant UCSRA_MPCM0        \ mpc mode enabled
$C1  constant UCSR0B
$C2  constant UCSRC
$C6  constant UDR0
```

2. waiting for the currently active transfer to complete (reusing definitions from the rs485 section above)

```
: txc  begin  RS485_PORT c@  RS485_PIN_MASK  and 0= until ;
```

   This is needed whenever we want to switch to mpc mode. Without waiting we will destroy any ongoing transmit.

3. enabling MPC mode (*7N2*)

```
: +mpc7
  txc
  $0C UCSRC c!                      \ 7N2
  UCSRA c@ $01 or UCSRA c!          \ MPCM0=1
;
```

4. disabling MPC mode (*8N1*)

```
: -mpc7 (  --  )
  UCSRA c@ $01 invert and UCSRA c!  \ MPCM=0
  $06 UCSRC c!                      \ 8N1
;
```

5. access to the RX data ring buffer

   Handling incoming data unfortunately requires access to the variables of the rx ring buffer, which are not readily available in forth. In a local copy of `drivers/usart-isr-rx.asm` we add appropriate provisions. The existing declaration of the used RAM space and sizes

```
; sizes have to be powers of 2!
.equ usart_rx_size = $10
.equ usart_rx_mask = usart_rx_size - 1
.dseg
usart_rx_data: .byte usart_rx_size+2
usart_rx_in:   .byte 2
usart_rx_out:  .byte 2
.cseg
```

   will be made available as amForth constants and variables.

```
\ variable USART_RX_DATA N allot \ &buffer[0]
\ variable USART_RX_IN           \ index
\ N 1- constant USART_RX_MASK    \ length-1, length=2^n
```

```
; ( -- value ) constant USART_RX_DATA
VE_USART_RX_DATA:
    .dw $FF0D
    .db "USART_RX_DATA",$00
    .dw VE_HEAD
    .set VE_HEAD = VE_USART_RX_DATA
XT_USART_RX_DATA:
    .dw PFA_DOVARIABLE
PFA_USART_RX_DATA:
    .dw usart_rx_data

; ( -- addr ) variable USART_RX_IN
VE_USART_RX_IN:
    .dw $ff0b
    .db "USART_RX_IN",$00
    .dw VE_HEAD
    .set VE_HEAD = VE_USART_RX_IN
XT_USART_RX_IN:
    .dw PFA_DOVARIABLE
PFA_USART_RX_IN:
    .dw usart_rx_in

; ( -- value ) constant USART_RX_MASK
VE_USART_RX_MASK:
    .dw $FF0D
    .db "USART_RX_MASK",$00
    .dw VE_HEAD
    .set VE_HEAD = VE_USART_RX_MASK
XT_USART_RX_MASK:
    .dw PFA_DOVARIABLE
PFA_USART_RX_MASK:
    .dw usart_rx_mask
```

This provides the words **USART_RX_DATA USART_RX_IN USART_RX_MASK** for our usage. Alternately we could setup our own variables and replace **rx-isr** with a version looking at them.

6. handling an incoming byte according to MPC-mode

```
UCSRA_FE0
UCSRA_DOR0  or
UCSRA_UPE0  or constant UCSRA_RX_ERR
: mpc?     UCSRA c@  UCSRA_MPCM0 and ;
: rx-err?  UCSRA c@  UCSRA_RX_ERR and ;
: rx-store ( udata -- )
  USART_RX_DATA USART_RX_IN c@  dup >r
  + !
  r> 1+ USART_RX_MASK and USART_RX_IN c!
;
: mpc-rx-isr
  rx-err? 0= if
    UDR0 c@              \ -- udata
    mpc? if
      stationID = if
        -mpc7
      then
    else
      rx-store
    then
  then
;
```

The new word command:*mpc-rx-isr* will inspect incoming data according to whether we are in MPC mode or not. It requires the node address in the value **stationID** as defined before.

7. string everything together

   In order to use all of the above we basically need to switch it on (and off):

```
: +rs485.mpc
  ['] prompt_rd is p_rd          \ overwrite p_rd
  +rs485
  ['] mpc-rx-isr USART0__RXAddr int! \ overwrite usart_rx_isr
  -emit
  +mpc7
;

: -rs485.mpc
  ['] (p_rd) is p_rd
  ['] usart_rx_isr USART0__RXAddr int!
  -rs485
  -mpc7
  +emit
;
```

   When using this in a turnkey word, make sure to disable **emit** before calling the original word **applturnkey**, because otherwise the output of **ver** will be written to the bus.

```
: run-turnkey
  -emit
  applturnkey
  +rs485.mpc

  \ more initialization here

\ begin
\   your periodic work goes here
\ again
;
```

We are all ready to go. Please note that you need some means to send `0x80 | 0xStationAddress` to the bus to address the desired node. Once connected you need to issue **+emit**, and only after that the ok-prompt will show up.

6.8 going to quiet mode on unparsable input

After everything worked thus far I found out, that sometimes more than one controller on the bus will be *awake* receiving data and acting on it. Most of the time this would result in error messages being sent to the bus, which in turn will create another round of error messages. I called this *the echo loop*. I did not find out, what really caused this behaviour, but instead I decided: whenever a node receives *illegible* input that cannot be handled properly, the node shall return to mpc *quiet* mode and not write any error messages at all.

The desired behaviour is a fairly fundamental change to the command loop, however, it is easy to install thanks to the availability of recognizers.

Any input will be parsed by a list of recognizers, the first to *understand* the input will trigger the corresponding work. The last in the list will be the one to possibly issue an error message. So we create a new recognizer and insert it into the list of recognizers before the one issueing error messages.

First we need to load the word **recognizer:**

```
include lib/recognizer.frt
```

After that we create a table holding 3 execution tokens. The first is to be called at runtime, the second at compile time, and the third during a postpone operation.

```
:noname -emit +mpc7 ;     \ at runtime call the equivalent of ~end
' noop                    \ nothing to do at compile time
```

```
:noname type -48 throw ; \ postpone would be an error
recognizer: r:quiet
```

The parsing word does basically nothing. If this recognizer is called, **rec:word** and **rec:num** have not been able to handle the input. So we simply drop the references to the unhandled input before the call into an entry of the newly created table **r:quiet**.

```
: rec:quiet  ( addr length -- t/f ) drop drop r:quiet ;
```

Registering and deregistering the new recognizer is a little involved, because we want to place it at the last position — if the last recognizer fails, the content of r:fail is called. After some fiddling, I decided to compare the last value with the one to be inserted or removed, such that repeated calls to "+rec:quiet" or "-rec:quiet" will not cause a problem.

```
: +rec:quiet
  ['] rec:quiet          \ -- r0
  forth-recognizer get-recognizers       \ -- r0 r1 r2 2
  dup pick               \ -- r0 r1 r2 2 r1
  ['] rec:quiet <> if    \ -- r0 r1 r2 2
    1+
    forth-recognizer set-recognizers
  else
    drop
  then
;

: -rec:quiet
  forth-recognizer get-recognizers       \ -- r0 r1 r2 3
  dup pick
  ['] rec:quiet = if
    1- forth-recognizer set-recognizers drop
  else
    0 ?do drop loop
  then

;
```

+rec:quiet needs to be called in **+rs485.mpc** and similar for **-rec:quiet**.

```
$28 constant USART0__RXAddr
: +rs485.mpc
  ['] prompt_rd is p_rd          \ overwrite p_rd
  +rs485
  ['] mpc-rx-isr USART0__RXAddr int! \ overwrite usart_rx_isr
  +rec:quiet
  -emit
  +mpc7
;

: -rs485.mpc
  ['] (p_rd) is p_rd
  ['] usart_rx_isr USART0__RXAddr int!
  -rec:quiet
  -rs485
  -mpc7
  +emit
;
```

6.9 turnkey

We are done. We can now put this together in a function to be called at system boot. The controller will immediately switch off any output and go to *quiet* mpc mode. As such the controller will behave well on a bus with

possibly other nodes.

```
: run-turnkey
  -emit
  applturnkey
  +rs485.mpc
;
```

Please note that **-emit** must be called before **applturnkey**, because the later does call **ver** producing the well known output

```
amforth 6.3 ATmega644P ok
```

or similar. But we do **not** want to write anything on the bus unless explicitly asked to do so.

7 creating a node

While the above implementation is *complete*, it may not be obvious, how to create a sensor node with all the required bits around it. So at least the description of a working example seems needed.

In my case the `collector` is a perl script, which will periodically address a list of nodes and for each of these

- write the address byte `0x80 | addr` to the bus
- write **+emit** after that (no echo characters expected)
- wait for the ok prompt
- write **~data** to the bus (waiting for each echo character, since those are coming from the controller now)
- read all the characters which come as an answer, e.g.

```
__Q 42:0005 4200:0  4201:0  4202:0  4203:0 C-- ok
```

  or

```
__Q 7F:0005 7F01:3,+19.50,+19.50,+19.50  7F02:3,514,516,518 C-- ok
```

- write **~end** to the bus (again waiting for each echo character)

The answer string is then parsed into pieces, and individual measurements are then inserted into a database table.

The `__Q` and `C--` tokens were inserted only to make parsing simpler. The second token consists of `stationID:softwareVersion`, both as a hex number. Tokens after that are either `sensorID:Counter` or `sensorID:N,xlow,xmean,xhigh` collections. Other formats are certainly possible, this is just my choice based on the decision *its all plain ascii*.

This represents the *high level* view of the node as seen from the *network* (aka bus). So the words

- **+emit**
- **~data**
- **~end**

must be available on the node.

So there are at least two ways to make **~data** report meaningful output.

1. interrupt only sensors

   If all sensors can be handled by appropriate interrupt service routines, those shall fill the variables with meaningful values. **~data** will then only read those values and report them over the bus.

   This setup is used for counters or *meters*. In my case the electricity meter has a so called *S0* interface with two pins + and −. + must be pulled high by a pullup resistor and connected to a controller pin. The meter will short the + to the − pin for a few milliseconds thus reporting one *count*. If the pin at the controller either can react on such a pulse by issueing an interrupt (external or pin change interrrupt) or if the pin is

connected to a counter register, that's all there needs to be done. Every low pulse will increment the value reported by **~data**.

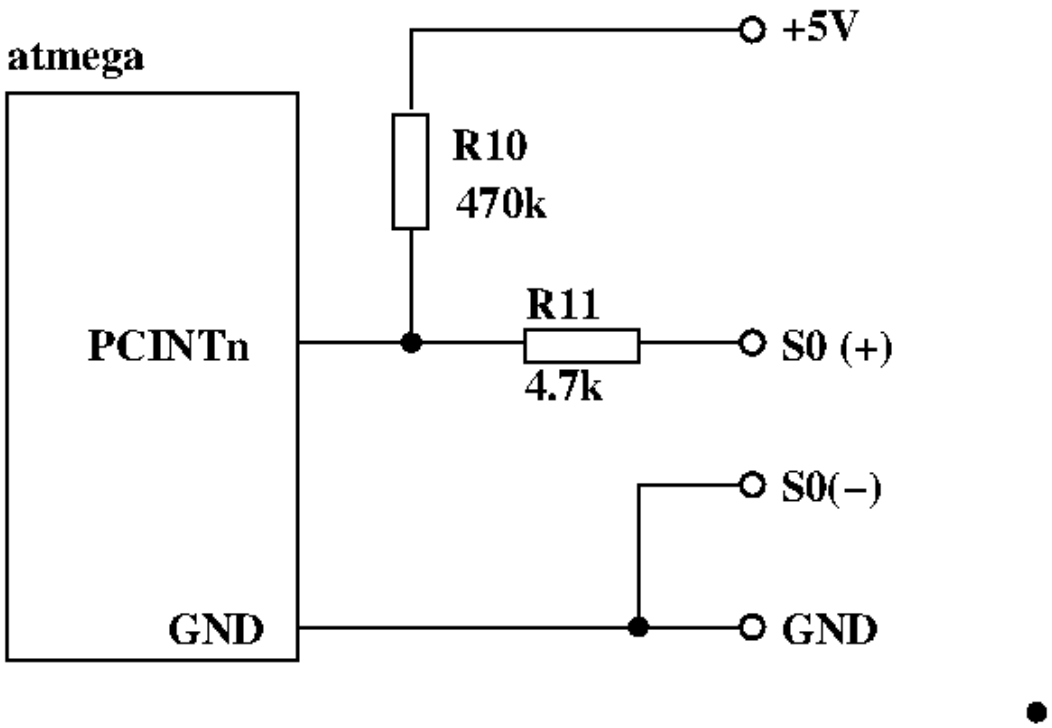

2. using the multitasker to do the work in the background

   If there is more work to be done, either on event or periodically, then using the multitasker is an option. There are only two tasks involved: the task serving the command line and the task periodically collecting sensor readouts into variables. The handling of sensors or events could be spread over more tasks, if needed for some reason.

   If **~data** is called on the command line, it will report the stored values and optionally reset the variables.

7.1 counter sensor

As an example I will outline the needed bits for a counter node. It will count *active-low* pulses on one of 4 pins. The controller is an atmega168, which features *pin-change-interrupts* on all port pins. The pulses are produced by an electricity meter with a so called *S0* interface. This particular electricity meter will produce 1000 counts per kWh consumed, each count consists of pulling pin + down for 90 milliseconds.

The pin change interrupt will trigger on falling and rising edges. There is only one interrupt for a group of eight pins (one port). So the interrupt service routine needs to find out, which pin exaclty triggered the interrupt, and whether a falling or rising edge did occur. On the falling edge we need to increment the associated counter for this pin.

```
\ --- data handling -------------------------
variable Count 4 cells allot
variable Pins_old
: pci1_isr
  ledsensor high
  PINC c@ $0F and        \ -- pins
  Pins_old c@            \ -- pins alt
```

```
  over                    \ -- pins alt pins
  xor                     \ -- pins diff
  dup if                  \ -- pins diff

    4 0 do                            \ for each (consequtive input) pin
      dup  1 i lshift  and if         \ . bit one changed?
        over  1 i lshift  and 0= if \ . leading edge?
          1  Count i cells +  +!      \ . increment
        then
      then
    loop

  then
  ( diff ) drop
  ( pins ) Pins_old c!
  ledsensor low
;
: +pci1
  $0F PCMSK1 c!   \ pcint 8..11 active
  $02 PCICR  c!   \ pci1 active
  $02 PCIFR  c!   \ clear PCI1, just in case
  PINC c@ $0F and  Pins_old !
  ['] pci1_isr PCINT1Addr int!
;
: -pci1
  $00 PCICR  c!
  $02 PCIFR  c!   \ clear PCI1, just in case
 ;
```

The function **~data** will then read the counter and report the value found as a plain ascii string on the serial interface. No provisions are taken to implement any access locking, reading the two bytes of the counter might result in inconsistent values.

```
\ counters are expected signed. A rollover can then be detected
\ and distinguished from restart of the controller.
\ therefore '.' not 'u.' in data.ls
: data.ls
  4 0 do
    space stationID @ >< i + &4 hex u0.r colon  Count i cells + @ decimal .
  loop
;
: ~data
  leddata high      \ fixme: leddata

  ." __Q"        \ datagram start
  .id+ver        \ stationID + swVersion
  data.ls
  ." C--"        \ datagram end
  leddata low
;
```

Since data is updated using an interrrupt service routine only, the available command loop is available to service any requests from the rs485–serial connection. If work has to be done outside the interrupt service routine, a multitasker can be used to run two tasks: one to read and process sensor data, and another one to run the command loop.

8 The *somtimes-not-so-obvious* things

As one of my lecturers kept saying: **Afterwards** *everything is obvious*. However, the path to obviousness can be long and windy at times.

1. Always provide a jumper to optionally disconnect the RX pin of the transceiver, IF you want to keep the existing RS232 transceiver working.
2. Consider adding jumpers to disconnect the bus. This is occasionally useful.

There is probably more to be said ...

9 Finally

Like always this work would not have been possible without substantial help from others. Special thanks go to Matthias Trute for amForth, for providing valuable feedback and picking up suggestions; Lubos Pekny for proving, that it can be done; the members of the amforth-devel mailing list, the weekly IRC round and of the German "Forth Gesellschaft e.V."; countless authors of documentation, code, or processes for all the countless pieces of software that comprise my workstation setup, e.g. bash, emacs and perl to name just three.

10 References

1. net4801 single board computer running the collector
   - http://www.soekris.com
2. Lubos Peknys *mFC* project using rs485 and mpc mode highly inspired this code and project
   - http://www.forth.cz
3. Pavel Pisa, implementing a 9-bit microLAN
   - http://cmp.felk.cvut.cz/~pisa/papers/pi-ulan-prot.pdf
   - http://ulan.sourceforge.net/

Date/Time to unix time and back

Author Erich Wälde

Contact amforth-devel@lists.sourceforge.net

Date 2015-11-11

To solve a particular problem with clocks, I decided to use epoch seconds (aka unix time). So this recipe demonstrates a working implementation. For starters we ask `date` for a current time stamp in epoch seconds:

```
$ date +%s
1446650000
```

The conversion back can be done, too:

```
$ date -u -d @1445566000
Fri Oct 23 02:06:40 UTC 2015
```

So we can produce test cases and verify or work.

leapyear?

Along the way we need to decide, whether a given year is a leap year or not. The current rule says: If the year is a multiple of 400, it is. Otherwise If it is a multiple of 100, it is not. Otherwise if it is a multiple of 4, it is a leap year, otherwise it's not. The code for this function takes the top of stack element, applies the rules and returns a true/false flag to the stack:

```
: leapyear? ( yyyy -- t/f )
  dup    &4 mod 0=
  over &100 mod 0<> and
  swap &400 mod 0=  or
;
```

A small amount of testing has never done any harm, so we load the corresponding module *lib/forth2012/tester/tester-amforth.frt* and feed a hand full of tests to the controller after that.

```
decimal
t{ 1970 leapyear? ->  0 }t
t{ 1972 leapyear? -> -1 }t
t{ 1999 leapyear? ->  0 }t
t{ 2000 leapyear? -> -1 }t
t{ 2001 leapyear? ->  0 }t
t{ 2004 leapyear? -> -1 }t
t{ 1900 leapyear? ->  0 }t
t{ 3900 leapyear? ->  0 }t
t{ 3996 leapyear? -> -1 }t
t{ 4000 leapyear? -> -1 }t
```

Running this code should list all tests as passed. This increases my confidence into the code — I can highly recommend test cases!

Manual conversion from epoch seconds to UT

We shall try to convert the value from the first example above back into common date/time format. `1445566000` is greater than $65536 == 2^{16}$

So with AmForth we need to use variables 2 cells wide. The function `ud/mod` (division with remainder) will help us with the calculation.

```
decimal
1445566000. 60 ud/mod .s
3  367 41054 40  ok
```

`40` is the correct value for *seconds* (remainder), the large double length number is the original number divided by 60, thus the time in full minutes.

```
60 ud/mod .s
4  6 8330 6 40  ok
```

`6` is the correct value for *minutes*, the large number is the time in full hours. Division by 24 will lead us on:

```
24 ud/mod .s
5  0 16731 2 6 40  ok
```

In other words, the initial value `1445566000` in epoch seconds represents `02:06:40 UT` time at `16731` days of the epoch, that is after `1970-01-01`

So we need to convert the number of days into the correct number of years and months, including handling of leap years. It would be nice to have functions similar to `ud/mod` however, we need to come up with them ourselves.

It should be noted that we need to extract the correct number of years first by subtracting days, and then convert the remaining days into months and days.

How many full years are in N days?

First we define a constant to hold the begin of the epoch. And after that a funny named function, which returns the length of a given year in days. These are just to make the remaining code more readable.

```
#1970 constant __Epoch
: 365+1 ( year -- 365|366 )
   #365 swap leapyear? if 1+ then
;
```

Then we define `years/mod` which extracts the full years from a given number of days. It returns the corresponding year and the remainder of days. There is no magic in this function, just a plain book keeping exercise. We need to correctly account for leap years, the loop starts with the first year of the epoch, 1970.

```
: years/mod ( T/day -- years T/day' )
   dup #365 u< 0= if          \ -- T
     __Epoch swap        \ -- year T
     begin
         over 365+1
         -
         swap 1+ swap     \ -- T-365 year+1
         over 365+1       \ -- year' T' 365
         over swap        \ -- year' T' T' 365
     u< until
   else
     __Epoch swap
   then
 ;
```

There might be more elegant solutions, however, this one works as the following tests should demonstrate.

```
t{      0 years/mod -> 1970   0 }t
t{      1 years/mod -> 1970   1 }t
t{     31 years/mod -> 1970  31 }t
t{    364 years/mod -> 1970 364 }t
t{    365 years/mod -> 1971   0 }t
t{    366 years/mod -> 1971   1 }t
t{    730 years/mod -> 1972   0 }t
t{   1094 years/mod -> 1972 364 }t
t{   1095 years/mod -> 1972 365 }t
t{   1096 years/mod -> 1973   0 }t
t{   1097 years/mod -> 1973   1 }t
t{  11322 years/mod -> 2000 365 }t
t{  11323 years/mod -> 2001   0 }t
```

Continuing the above conversion yields:

```
> .s
5  0 16731 2 6 40  ok
d>s years/mod .s
5  295 2015 2 6 40  ok
>
```

In the `16731` days are 45 full years, so the correct value for year is `2015` as expected. There are `295` days in that year left.

How many full months are in N days?

A similar exercise of book keeping leads us to extract the correct number of months from the remainder above : 295 .

So first I decided to create a list of accumulated days at the end of the month. The list covers common years, leap years need to be accounted for differently. Again, there is no particular magic. We search the list from its far end down until the number from the list is smaller than the remaining days given as argument.

```
: months/mod ( year T/day -- year month T/day' )
  dup 0= if
     drop 1 1
```

```
  else
     &12 swap            \ -- year month T
     begin
         over __acc_days + @i        \ AmForth
  \   over cells __acc_days + @   \ gForth
                         \ -- year month T acc_days[month]
         \ correct acc_days for leap year and months > 1 (January)
         3 pick leapyear? 3 pick 1 > and if 1+ then
         over over swap  \ -- year month T acc_days[month] acc_days[month] T
         u>
     while               \ -- year month T acc_days[month]
         drop swap 1- swap
                         \ -- year month-1 T
     repeat              \ -- year month' T acc_days[month']
     -                   \ -- year month' T-acc_days[month']
     swap 1+
     swap 1+
   then
;
```

We test this with the ongoing conversion:

```
> .s
5  295 2015 2 6 40  ok
> months/mod .s
6  23 10 2015 2 6 40  ok
> swap rot .s
6  2015 10 23 2 6 40  ok
>
```

The result is as expected. More tests can be applied:

```
t{ 1970   0 months/mod -> 1970  1  1 }t
t{ 1970   1 months/mod -> 1970  1  2 }t
t{ 1970  30 months/mod -> 1970  1 31 }t
t{ 1970  31 months/mod -> 1970  2  1 }t
t{ 1970  59 months/mod -> 1970  3  1 }t
t{ 1970  90 months/mod -> 1970  4  1 }t
t{ 1970 120 months/mod -> 1970  5  1 }t
t{ 1970 151 months/mod -> 1970  6  1 }t
t{ 1970 181 months/mod -> 1970  7  1 }t
t{ 1970 212 months/mod -> 1970  8  1 }t
t{ 1970 243 months/mod -> 1970  9  1 }t
t{ 1970 273 months/mod -> 1970 10  1 }t
t{ 1970 304 months/mod -> 1970 11  1 }t
t{ 1970 334 months/mod -> 1970 12  1 }t
t{ 1970 364 months/mod -> 1970 12 31 }t
t{ 1996   0 months/mod -> 1996  1  1 }t
t{ 1996   1 months/mod -> 1996  1  2 }t
t{ 1996  30 months/mod -> 1996  1 31 }t
t{ 1996  31 months/mod -> 1996  2  1 }t
t{ 1996  60 months/mod -> 1996  3  1 }t
t{ 1996  91 months/mod -> 1996  4  1 }t
t{ 1996 121 months/mod -> 1996  5  1 }t
t{ 1996 152 months/mod -> 1996  6  1 }t
t{ 1996 182 months/mod -> 1996  7  1 }t
t{ 1996 213 months/mod -> 1996  8  1 }t
t{ 1996 244 months/mod -> 1996  9  1 }t
t{ 1996 274 months/mod -> 1996 10  1 }t
t{ 1996 305 months/mod -> 1996 11  1 }t
t{ 1996 335 months/mod -> 1996 12  1 }t
t{ 1996 365 months/mod -> 1996 12 31 }t
```

This implementation may seem somewhat convoluted. I'm sure there are more elegant solutions possible, however,

readable code is highly valued, too. Passing the tests increases our confidence.

Converting Epoch Seconds to UT

At this point we have the tools to convert unix time (epoch seconds) into the well known and much better readable date/time format.

```
: d>s   drop ;
: s>ut  ( d:EpochSeconds -- sec min hour day month year/UT )
  #60 ud/mod          \ -- sec d:T/min
  #60 ud/mod          \ -- sec min d:T/hour
  #24 ud/mod          \ -- sec min hour d:T/day
  d>s
  years/mod           \ -- sec min hour year T/day
  months/mod          \ -- sec min hour year month day
  swap rot            \ -- sec min hour day month year
;
```

A fairly big list of test cases is nice. The last test will fail, because it overflows the size of `2variable`. The second to last test will succeed, because I use unsigned values for unix time — contrary to to the standard definition. So this implementation is not impaired at the 2038 overflow and keeps working until 2106.

```
t{              0. s>ut ->  0  0  0  1  1 1970 }t
t{           3600. s>ut ->  0  0  1  1  1 1970 }t
t{          86400. s>ut -> 00 00 00 02 01 1970 }t
t{       31536000. s>ut -> 00 00 00 01 01 1971 }t
t{      100000000. s>ut -> 40 46 09 03 03 1973 }t
t{      951782400. s>ut -> 00 00 00 29 02 2000 }t
t{     1000000000. s>ut -> 40 46 01 09 09 2001 }t
t{     1044057600. s>ut -> 00 00 00 01 02 2003 }t
t{     1044144000. s>ut -> 00 00 00 02 02 2003 }t
t{     1046476800. s>ut -> 00 00 00 01 03 2003 }t
t{     1064966400. s>ut -> 00 00 00 01 10 2003 }t
\ leap year, end of February
t{     1077926399. s>ut -> 59 59 23 27 02 2004 }t
t{     1077926400. s>ut -> 00 00 00 28 02 2004 }t
t{     1077926410. s>ut -> 10 00 00 28 02 2004 }t
t{     1078012799. s>ut -> 59 59 23 28 02 2004 }t
t{     1078012800. s>ut -> 00 00 00 29 02 2004 }t
t{     1078012820. s>ut -> 20 00 00 29 02 2004 }t
t{     1078099199. s>ut -> 59 59 23 29 02 2004 }t
t{     1078099200. s>ut -> 00 00 00 01 03 2004 }t
t{     1078099230. s>ut -> 30 00 00 01 03 2004 }t
t{     1078185599. s>ut -> 59 59 23 01 03 2004 }t
t{     1096588800. s>ut -> 00 00 00 01 10 2004 }t
t{     1413064016. s>ut -> 56 46 21 11 10 2014 }t
t{     1413064100. s>ut -> 20 48 21 11 10 2014 }t
\ 31 bit max
t{     2147483648. s>ut -> 08 14 03 19 01 2038 }t
t{     2147483649. s>ut -> 09 14 03 19 01 2038 }t
\ 32 bit max
t{     4294967295. s>ut -> 15 28 06 07 02 2106 }t
\ this is still working because I use
\ Epoch seconds as 32 bit *unsigned* integer
\ in disagreement with the standard definition
\ overflow here :-) with amForth, not gForth
t{     4294967296. s>ut -> 16 28 06 07 02 2106 }t
```

The interested reade will note at this point, that time zones were not considered up to this point.

Converting UT back to Epoch Seconds

The inverse function is another book keeping exercise. Beginning with the year we convert the entries on the stack to days and then to increasingly smaller units, adding up the appropriate values as needed.

```
: ut>s ( sec min hour day month year -- d:T/sec )
  \ add start value T=0
  0 over                \ -- sec min hour day month year T=0 year
  __Epoch               \ -- sec min hour day month year T year Epoch
  ?do
     i 365+1 +
  loop                  \ -- sec min hour day month year T/days
  2 pick 1-             \ -- sec min hour day month year T/days month-1
  __acc_days + @i       \ -- sec min hour day month year T/days acc_days[month] \ amForth
\    cells __acc_days + @ \ -- sec min hour day month year T/days acc_days[month] \ gForth
  +                     \ -- sec min hour day month year T/days
  swap                  \ -- sec min hour day month T/days year
  leapyear? rot 2 > and if 1+ then
  \                     \ -- sec min hour day T/days
  swap 1- +             \ -- sec min hour T/days
  s>d
  #24 1 m*/ rot s>d d+  \ -- sec min T/hours
  #60 1 m*/ rot s>d d+  \ -- sec T/minutes
  #60 1 m*/ rot s>d d+  \ -- T/sec
;
```

More interesting test cases taken from Wikipedia:

```
t{ 20 33 03  18 05 2033 ut>s 2000000000 }t
t{ 00 40 02  14 07 2017 ut>s 1500000000 }t
t{ 52 49 05  18 07 2029 ut>s  $70000000 }t
t{ 36 25 08  14 01 2021 ut>s  $60000000 }t
t{ 20 01 11  13 07 2012 ut>s  $50000000 }t
t{ 40 46 09  03 03 1973 ut>s  100000000 }t
```

Time Zone CET/CEST

In order to handle time zones I decided to define constants providing the offset to UT in seconds. This information is added to the stack before the date and time values.

```
#3600 constant CET
#7200 constant CEST

: dt>s ( tzoffset sec min hour day month year -- d:epochsec )
  ut>s
  rot s>d d-
;
```

And a last round of test cases:

```
t{ CET   0  0  0  1  1 1970 dt>s ->      -3600. }t
t{ CET   0  0  1  1  1 1970 dt>s ->          0. }t
t{                      0. s>ut ->  0  0  0  1  1 1970 }t
t{ CET  59 59 23  1  1 1970 dt>s ->      82799. }t
t{ CET  59 59  0 02 01 1970 dt>s ->      86399. }t
t{ CET   0  0  1  2  1 1970 dt>s ->      86400. }t
t{                  86400. s>ut -> 00 00 00 02 01 1970 }t
t{ CET   1  0  1  2  1 1970 dt>s ->      86401. }t
t{ CET  59 59 23 31  1 1970 dt>s ->    2674799. }t
t{ CET   0  0  0  1  2 1970 dt>s ->    2674800. }t
t{ CET   1  0  0  1  2 1970 dt>s ->    2674801. }t
t{ CET  59 59 23 28  2 1970 dt>s ->    5093999. }t
```

```
t{ CET   0  0  0  1  3 1970 dt>s ->    5094000. }t
t{ CEST 30 15 12  1  6 1971 dt>s ->   44619330. }t
t{ CEST  6  3 17 12 10 2014 dt>s -> 1413126186. }t
t{ CEST 00 00 00 29 06 2000 dt>s ->  962229600. }t
t{ CET  00 00 00 29 01 2000 dt>s ->  949100400. }t
t{ CET  00 00 00 28 02 2000 dt>s ->  951692400. }t
t{               951692400. s>ut -> 00 00 23 27 02 2000 }t
t{ CET  00 00 00 29 02 2000 dt>s ->  951778800. }t
t{ CET   0  0  1  1  1 1970 dt>s ->          0. }t
t{                      0. s>ut ->  0  0  0  1  1 1970 }t
t{ CET   0  0  1 29  2 1972 dt>s ->   68169600. }t
t{                68169600. s>ut ->  0  0  0 29  2 1972 }t
t{ CET  00 00 01 28 02 1972 dt>s ->   68083200. }t
t{                68083200. s>ut -> 00 00 00 28 02 1972 }t
t{ CEST 40 46 03 09 09 2001 dt>s -> 1000000000. }t
t{              1000000000. s>ut -> 40 46 01 09 09 2001 }t
t{ CET  00 00 01 01 01 2004 dt>s -> 1072915200. }t
t{              1072915200. s>ut -> 00 00 00 01 01 2004 }t
```

Happy Forthing.

Coinforth including an ARD101 Tutorial by Dennis Ruffer

Cranberry-net a remote sensing network for cranberry bogs, wetlands etc.by Andreas Wagner

A scientific paper: Use of Forth to Enable Distributed Processing on Wireless Sensor Networks

CHAPTER

FIVE

COOKBOOK

The Cookbook is a collection of small and not so small recipes. Every recipe is intended to deal with exactly one task. It is a living document, so expect changes at any time.

Popular Boards

Arduino Hello World

The example demonstrates a blinking LED. Most arduino's have one attached to the port Digital-13. For this recipe, the amforth system is already loaded onto the ardiuno. Instructions to do it are in the *User's Manual*.

To quickly test the hardware start a terminal (e.g. screen /dev/ttyACM0 38400) and enter the following commands (assuming an Arduino Uno)

```
> $20 $24 c!
> $20 $25 c!
> $00 $25 c!
```

The LED turned on until the last command is executed. The character **>** is the command prompt, if you see it, you can enter any commands. You'll never enter that character yourselves. A command line can be up to 80 characters long.

The commands above are pretty obscure. To make them easier to understand we define labels for some numbers, so called constants:

```
> $25 constant PORTB
> $24 constant DDRB
```

The arduino uses its own numbering schema for pins, but for now we use the atmega one: digial-13 is the same as bit 7 of port B. Port B has 8 pins and three registers to configure them. we need two of them: The Data Direction Register (DDR) and the PORT (Output) Register. The third register is used for reading from the port (PIN).

The above commands can now be written as

```
> $20 DDRB c!
> $20 PORTB c!
> $00 PORTB c!
```

Technically the same but easier to read.

Next we do not want to enter all commands interactively. Forth has the reputation of an extendible command set.

Good forth coding style means to have many small words which do exactly one thing. Most forth commands are built with only a handful other commands.

The first command in this example sets up the Data Direction Register DDR to configire the LED Port as an output pin. In arduino sketch it would be:

```
void setup() {
   pinMode(13, OUTPUT);
}
```

The same in Forth is:

```
> : led-init  $80 DDRB c! ;
 ok
>
```

With this command line the interpreter learns a new command: **led-init**. This command can be called immediately.

```
> led-init
 ok
>
```

It writes the number 128 (hex 80) to the register DDRB (hex 24) as defined above. This makes the 7th bit of PORTB an Output pin.

Calling our newly defined word does not change anything visible. But with the next word, the LED will turn on:

```
: led-on $80 PORTB c! ;
```

Here the 7th bit will be set to 1, and that makes the led to be connected to VCC (5V) and it will turn on (the LED is connected to ground already).

If the led-on command does not turn on the LED just call the **led-init** command (again). The led-init is needed after an reset or power cycle as well.

Now that the led is active, we want a command to turn it off. One solution is to repeat the command from above: **0 PORTB c!**. Smarter is a new command word:

```
: led-off  0 PORTB c! ;
```

You can now use the newly defined commands to turn the led on and off:

```
> led-on led-off led-on led-off
 ok
>
```

Since there is no timing yet, you may not even see the led flash, amforth is pretty fast.

Our next word will simplify this and gives the real blink experience:

```
: led-blink led-on 500 ms led-off 500 ms ;
```

Calling this command will turn on the led, waits for half a second, turn it off again and waits another half a second before returning to the command prompt.

With this command you can blink the led a few times

```
> led-blink led-blink led-blink
 ok
>
```

The led will blink for a 3 seconds before the ok and returning to the command prompt.

To make it blink "forever", we define another command word:

```
: blink-forever
  ." press any key to stop "
  begin
     led-blink
     key?
  until
  key drop
;
```

Since this is our first command which needs more than 1 line, the interpreter acts more complex. It changes the command prompt until the end of the command definition is reached (the command `;`) The ouput in the terminal window looks like

```
> : blink-forever
 ok." press any key to stop"
 okbegin
 ok led-blink
 ok key?
 okuntil
 okkey drop
 ok;
 ok
>
```

This word first prints some text ("press any key to stop") and starts a loop. This loop lets the led blink once and checks for a keystroke. If no key is pressed, the loops is repeated. If a key is pressed, the loop is terminated. The last two commands are housekeeping: get the key pressed and forget it. Otherwise the key pressed would be the first character of the next command line.

The advantage of defining many words is that you can test them immediately. Thus any further code can rely on words already being tested. That makes debugging a lot easier. The drawback of that many words? You need to remember their names.

Where to go next

This example is very basic. Next steps may involve library code like *Digital Ports*. Related to it are the *Shells And Upload* for files with forth code.

More Arduino related stuff is in *Arduino Analog*.

Arduino Analog

Accessing the Analog ports for reading needs the files `lib/bitnames.frt` for basic routines, the file `appl/arduino/blocks/ports-arduinotype.frt` for the actual ports and `appl/arduino/blocks/wiring_analog.frt` for the code to do the work. After loading the files, the Analog Conversion Module has to be initialized with the **`adc.init`**. This has to be done after a reset and power cycle as well.

Now it is time to connect some hardware to one of the ports labled *Analog In*. Once this is done, some simple commands will work:

```
> analog.1 adc.get u.
67 ok
>
```

The ADC on the ATmega has a resolution of 10 bits, thus a number between 0 and 1023 can be expected as the result.

Note that the ADC module needs some time between two conversion. If you do it too fast, expect malfunctions or even crashes. A simple **`50 ms`** circumvent most problems.

```
\ continuously read the adc port
\ and print the new value if it
\ has changed considerably since last round
\ note the 50ms delay to keep things
\ run smoothly. A key press will
\ return to the command prompt
: analog-test
   0
   begin
      ( -- old )
```

```
    analog.1 adc.get  ( -- old new  )
    swap over         ( -- new old new )
    - abs 6 >         ( -- new f )
    50 ms             ( wait...)
    if dup u. then    ( -- new )
    key?              ( -- new f )
  until
  key drop
  drop ;
```

AVR Butterfly

The Butterfly Demo board from Atmel uses an Atmega169 controller. It uses the internal 8MHz oscillator which can be calibrated with the external 32kHz quartz.

amforth uses the serial connection (3pin connection on the left side) as it's terminal.

amforth *completely* replaces the flash content. It overwrites the bootloader. You definitely need ISP or JTAG to upload amforth to the controller. Afterwards the serial programming does not work anymore. You've been warned!

A lot of useful code and examples how to use the various parts of the butterfly can be found at the wiki of the German FIG Forth e.V. at www.forth-ev.de/wiki/doku.php/projects:avr:hilfsmittel. Basic Knowledge of the German language is required.

The 32 kHz external quartz can be used to generate a timer tick. The following definition may help:

```
\ implement a timer with the 32kHz oszillator
decimal
\ timer/counter subsystem
182 constant ASSR
\ timer/counter2
 179 constant OCR2A
 178 constant TCNT2
 176 constant TCCR2A
 112 constant TIMSK2
 75 constant GPIOR2
 55 constant TIFR2
4  constant    OC2addr
5  constant    OVF2addr

variable tick

\ increment the tick variable
: timer2isr ( -- )
   1 tick +!
;

\ initialize and start the timer.
: +32kHz ( -- )
   \ Set timer 2 to asyncronous mode (32.768KHz crystal)
   1 3 lshift ASSR c!
   \ Start with prescaler 128
   1 0 lshift
   1 2 lshift or TCCR2A c!
   \ Wait until timer 2's external 32.768KHz crystal is stable
   begin
       ASSR c@
       1 2 lshift     \ TCN2UB
       1 0 lshift or \ TCR2UB
       1 1 lshift or \ OCR2UB
       and
```

```
   until
   0 tick !
   \ use overflow interrupt
   ['] timer2isr OVF2addr int!
   1 TIMSK2 c!
;

: -32kHz
   \ Turn off interrupt
   0 TIMSK2 c!
   \ Turn off timer 2 asynchronous mode
   ASSR c@
   1 3 lshift invert and ASSR c!
;
```

Texas Instruments LaunchPad 430

Texas Instruments has the MSP430 microcontroller familiy. It is completely different to the AVR Atmegas. Amforth recently started to support it as well. The Forth kernel is (almost) the same, many tools like the amforth-shell work for both too. Since the MSP430 is new, bugs and other oddities are more likely than for the Atmegas.

The sources are made for the naken_asm assembler.

Playing with the Launchpad

The LEDs can be used as follows

```
: red:init   1 34 bm-set ;
: red:on     1 33 bm-set ;
: red:off    1 33 bm-clear ;
: green:init 64 34 bm-set ;
: green:on   64 33 bm-set ;
: green:off  64 33 bm-clear ;
```

Example for (machine) code (instead of the forth code above)

```
code red:init  $D3D2 , $0022 , end-code
code red:on  $D3D2 , $0021 , end-code
code red:off $C3D2 , $0021 , end-code
```

There are many ways to wait, e.g. do other things while waiting (*PAUSE*). A simple approach is do nothing:

```
: ms 0 ?do 1ms loop ;
```

Now let the red LED blink ONCE

```
: blink red:on 100 ms red:off 100 ms ;
```

Test it! Now! The compiled version is *much* faster than the sequence "1 33 bm-set 1 33 bm-clear" (watch the red flashes). Next is to let it blink until a key is pressed

```
: blink-forever begin blink key? until key drop ;
```

A big difference to the AVR's is that amforth for the MSP430 needs an explicit **save** command to make all writes to the dictionary permanent. Otherwise every changes are lost at **cold** or reset and moreover a re-flash is necessary.

Hardware Setup

At the first glance, the hardware setup is trivial: Connect your Launchpad to the USB port of your PC. It may take a while until the modem manager detects that it is not a device it can handle. Now open a terminal (I use minicom)

and set the serial port settings: */dev/acm0*, 9600 and 8N1 without flow control.

MSP430 G2553

The mspdebug to actually program the controller uses the rf2500 protocol:

```
> mspdebug rf2500 "prog launchpad430.hex "
 MSPDebug version 0.22 - debugging tool for MSP430 MCUs
 Copyright (C) 2009-2013 Daniel Beer <dlbeer@gmail.com>
 This is free software; see the source for copying conditions.  There is NO
 warranty; not even for MERCHANTABILITY or FITNESS FOR A PARTICULAR PURPOSE.

 Trying to open interface 1 on 007
 rf2500: warning: can't detach kernel driver: No data available
 Initializing FET...
 FET protocol version is 30394216
 Set Vcc: 3000 mV
 Configured for Spy-Bi-Wire
 fet: FET returned error code 4 (Could not find device or device not supported)
 fet: command C_IDENT1 failed
 Using Olimex identification procedure
 Device ID: 0x2553
   Code start address: 0xc000
   Code size         : 16384 byte = 16 kb
   RAM  start address: 0x200
   RAM  end   address: 0x3ff
   RAM  size         : 512 byte = 0 kb
 Device: MSP430G2xx3
 Number of breakpoints: 2
 fet: FET returned NAK
 warning: device does not support power profiling
 Chip ID data: 25 53
 Erasing...
 Programming...
 Writing  424 bytes at 0200...
 Writing  188 bytes at 1000...
 Writing 4096 bytes at e000...
 Writing 4008 bytes at f000...
 Writing   32 bytes at ffe0...
 Done, 8748 bytes total
```

Your Amforth terminal session (minicom) should now print some readable characters like

```
+-------------------------------------
| amforth 5.6 MSP430G2553 8000 kHz
| >
|
```

Thats all. If nothing has happened look for error messages in the mspdebug window. Try replugging the launchpad. Some more information are in the *Amforth with Raspberry PI* recipe.

You can reprogram the controller via USB whilst the terminal session is still active. In this case you'll see repeated welcome strings from amforth due to some resets.

```
+-------------------------------------
| amforth 5.6 MSP430G2553 8000 kHz
| > amforth 5.6 MSP430G2553 8000 kHz
| > amforth 5.6 MSP430G2553 8000 kHz
| > amforth 5.6 MSP430G2553 8000 kHz
| > amforth 5.6 MSP430G2553 8000 kHz
| >
|
```

MSP430 F5529 & FR5969

Thess chips require the libmsp430.so from TI which is (at least with ubuntu) *not* part of the mspdebug package. I used the one from Energia and copied it into `/usr/lib`.

```
$ mspdebug tilib "prog amforth-5529.hex"
MSPDebug version 0.22 - debugging tool for MSP430 MCUs
Copyright (C) 2009-2013 Daniel Beer <dlbeer@gmail.com>
This is free software; see the source for copying conditions.  There is NO
warranty; not even for MERCHANTABILITY or FITNESS FOR A PARTICULAR PURPOSE.

tilib: can't find libmsp430.so: libmsp430.so: cannot open shared object file: No such file or dire
```

If the following error message is displayed

```
tilib: MSP430_Initialize: Interface Communication error (error = 35)
```

the modem manager is still using the serial port. Just wait for it.

The next error message is potentially more troublesome

```
mspdebug tilib "prog amforth-5529.hex"
MSPDebug version 0.22 - debugging tool for MSP430 MCUs
Copyright (C) 2009-2013 Daniel Beer <dlbeer@gmail.com>
This is free software; see the source for copying conditions.  There is NO
warranty; not even for MERCHANTABILITY or FITNESS FOR A PARTICULAR PURPOSE.

MSP430_GetNumberOfUsbIfs
MSP430_GetNameOfUsbIf
Found FET: ttyACM0
MSP430_Initialize: ttyACM0
FET firmware update is required.
Re-run with --allow-fw-update to perform a firmware update.
tilib: device initialization failed
```

Now you have to update the programming module on the launchpad. Be aware that this is a potentially dangerous action, it may seem to brick the chip (if not, you're lucky) if something goes wrong:

```
$ mspdebug tilib --allow-fw-update
MSPDebug version 0.22 - debugging tool for MSP430 MCUs
Copyright (C) 2009-2013 Daniel Beer <dlbeer@gmail.com>
This is free software; see the source for copying conditions.  There is NO
warranty; not even for MERCHANTABILITY or FITNESS FOR A PARTICULAR PURPOSE.

MSP430_GetNumberOfUsbIfs
MSP430_GetNameOfUsbIf
Found FET: HID_FET
MSP430_Initialize: HID_FET
FET firmware update is required.
Starting firmware update (this may take some time)...
tilib: MSP430_FET_FwUpdate: MSP-FET / eZ-FET recovery failed (error = 73)
tilib: device initialization failed
```

In this case try running the command as root e.g. via sudo

```
$ sudo mspdebug tilib --allow-fw-update
[sudo] password for <user>:
MSPDebug version 0.22 - debugging tool for MSP430 MCUs
Copyright (C) 2009-2013 Daniel Beer <dlbeer@gmail.com>
This is free software; see the source for copying conditions.  There is NO
warranty; not even for MERCHANTABILITY or FITNESS FOR A PARTICULAR PURPOSE.

MSP430_GetNumberOfUsbIfs
MSP430_GetNameOfUsbIf
```

```
Found FET: HID_FET
MSP430_Initialize: HID_FET
FET firmware update is required.
Starting firmware update (this may take some time)...
Initializing bootloader...
Programming new firmware...
  0 percent done
 34 percent done
 67 percent done
100 percent done
Update complete
Done, finishing...
MSP430_VCC: 3000 mV
tilib: MSP430_VCC: Internal error (error = 68)
tilib: device initialization failed
```

The error 68 signals "ok, I'm almost done". Now re-run the same command to finally do the firmware update. Note some subtle differences in the output like the HID_FET vs. ttyACM0.

```
$ sudo mspdebug tilib --allow-fw-update
MSPDebug version 0.22 - debugging tool for MSP430 MCUs
Copyright (C) 2009-2013 Daniel Beer <dlbeer@gmail.com>
This is free software; see the source for copying conditions.  There is NO
warranty; not even for MERCHANTABILITY or FITNESS FOR A PARTICULAR PURPOSE.

MSP430_GetNumberOfUsbIfs
MSP430_GetNameOfUsbIf
Found FET: ttyACM0
MSP430_Initialize: ttyACM0
FET firmware update is required.
Starting firmware update (this may take some time)...
Initializing bootloader...
Programming new firmware...
  4 percent done
 20 percent done
 36 percent done
 52 percent done
 68 percent done
 84 percent done
100 percent done
Update complete
Done, finishing...
MSP430_VCC: 3000 mV
MSP430_OpenDevice
MSP430_GetFoundDevice
Device: MSP430F5529 (id = 0x0030)
8 breakpoints available
MSP430_EEM_Init
Chip ID data: 55 29 18

Available commands:
  =           erase       isearch     power       save_raw    simio
  alias       exit        load        prog        set         step
  break       fill        load_raw    read        setbreak    sym
  cgraph      gdb         md          regs        setwatch    verify
  delbreak    help        mw          reset       setwatch_r  verify_raw
  dis         hexout      opt         run         setwatch_w

Available options:
  color                       gdb_loop
  enable_bsl_access           gdbc_xfer_size
  enable_locked_flash_access  iradix
  fet_block_size              quiet
```

```
  gdb_default_port

Type "help <topic>" for more information.
Use the "opt" command ("help opt") to set options.
Press Ctrl+D to quit.

(mspdebug) <Ctrl-D>
MSP430_Run
MSP430_Close
```

If done properly the actions looks as follows

```
$ sudo mspdebug tilib --allow-fw-update
MSPDebug version 0.22 - debugging tool for MSP430 MCUs
Copyright (C) 2009-2013 Daniel Beer <dlbeer@gmail.com>
This is free software; see the source for copying conditions.  There is NO
warranty; not even for MERCHANTABILITY or FITNESS FOR A PARTICULAR PURPOSE.

MSP430_GetNumberOfUsbIfs
MSP430_GetNameOfUsbIf
Found FET: ttyACM0
MSP430_Initialize: ttyACM0
FET firmware update is required.
Starting firmware update (this may take some time)...
Initializing bootloader...
Programming new firmware...
  75 percent done
  84 percent done
  84 percent done
  91 percent done
  96 percent done
  99 percent done
 100 percent done
 100 percent done
Initializing bootloader...
Programming new firmware...
   4 percent done
  20 percent done
  36 percent done
  52 percent done
  68 percent done
  84 percent done
 100 percent done
Update complete
Done, finishing...
MSP430_VCC: 3000 mV
MSP430_OpenDevice
MSP430_GetFoundDevice
Device: MSP430FR5969 (id = 0x012d)
3 breakpoints available
MSP430_EEM_Init
Chip ID data: 69 81 30

Available commands:
  =           erase       isearch     power       save_raw    simio
  alias       exit        load        prog        set         step
  break       fill        load_raw    read        setbreak    sym
  cgraph      gdb         md          regs        setwatch    verify
  delbreak    help        mw          reset       setwatch_r  verify_raw
  dis         hexout      opt         run         setwatch_w

Available options:
  color                       gdb_loop
```

```
  enable_bsl_access           gdbc_xfer_size
  enable_locked_flash_access  iradix
  fet_block_size              quiet
  gdb_default_port

Type "help <topic>" for more information.
Use the "opt" command ("help opt") to set options.
Press Ctrl+D to quit.

(mspdebug)  <Ctrl-D>
MSP430_Run
MSP430_Close
```

Now your hardware is configured to upload the hexfiles from amforth

```
$ mspdebug tilib "prog amforth-5529.hex"
```

giving the amforth command prompt in your serial terminal

```
amforth 6.1 MSP430F5529 8000 kHz
> words
key? key emit? emit ...
```

Amforth with Raspberry PI

No, this recipe is not abot using amforth *on* the Raspberry PI, but use the RPi as the development platform *for* the microcontrollers it supports.

Compiling amforth for the Atmegas requires the Atmel Assembler which runs only on some, widespread however, platforms like Windows and x86 Linux with wine. It is however possible to use the *avrdude* program to flash the controller.

The MSP430 variant got the full toolchain working. The necessary tools *naken_asm* and *mspdebug* work fine.

Installation

The setup has been tested with pidora, other linux's should work the same way.

The *mspdebug* utility requires direct access to the USB port. This can be either achieved by running it as root or (better) by adding a file */etc/udev/rules.d/46-TI-Launchpad.rules* with the content (a single line)

```
ATTRS{idVendor}=="0451", ATTRS{idProduct}=="f432", MODE="0660", GROUP="plugdev"
```

Restart udev afterwards and re-plug the launchpad. The user account you're using has to become a member of the plugdev group. Check with *id*, re-login if necessary.

The *naken_asm* is installed from the sources. Just follow the instructions.

Other tools are the *make* utility (or ant), the editor and the terminal program.

General Code Examples

Defining and using Arrays

The traditional approach is the following:

```
create my-array 42 cells allot
```

This creates the dictionary entry named my-array and allocates 42 cells in RAM. BUT: the my-array dictionary entry is not connected to the allocated RAM. The correct solution is:

```
variable my-array  42 cells allot
```

This makes the dictionary entry named my-array, sets up the link to the RAM address and allocates an *additional* amount of 42 cells in RAM.

Forth 200x introduced a new word named Buffer:. With it the above code turns into

```
43 buffer: my-array
```

please note the different sizes! The `buffer:`-implementation allocates the exact number of bytes whereas the `variable` version adds the given size parameter to the 1 cell it allocates anyways.

The use of the array is quite simple:

```
: my-array-@ cells my-array + @ ;
: my-array-! cells my-array + ! ;
```

Arrays of structures

This example uses structures. Structures can be used after including of the `structures.frt` file. First a hash data structure consisting of two elements is defined. This structure is used to create an array of a few elements afterwards.

```
begin-structure hash
 field: hash.key
 field: hash.value
end-structure

\ inspired by CELLS
\ ( n -- size )
\ calculates the size of n items of the
\ type hash
: hash-cells hash * ;

\ define a hash-array
: hash:
    hash-cells buffer:
  does>
    swap hash-cells  +
;
```

The helper word `hash-cells` calculates the size of the data structure in terms of byes, just like the standard word `cells` does it.

Now we're using the words (using the amforth-shell). First define an array of 4 hash pairs. After that store a key/value pair at a particular position and retrieve it again later.

```
(ATmega16)> 4 hash: my-hash
  ok
(ATmega16)> 42 3 my-hash hash.key !
  ok
(ATmega16)> 4711 3 my-hash hash.value !
  ok
(ATmega16)> 3 my-hash hash.key @ .
  42  ok
(ATmega16)> 3 my-hash hash.value @ .
  4711  ok
(ATmega16)>
```

If you place the data structure in a different memory (e.g. the EEPROM) adapt the code accordingly. `buffer:` needs to be replaced with a similiar allocation word and `@/!` with the proper memory access words. Remember, memory is not always 2 bytes per cell.

See also:

Structures

Blocks

Blocks are the simple mass storage for forth. The mass storage is divided in a series of fixed size memory segments that are transferred at once. To identify a memory segment, a block number is used. This number start with 1 and can be as big as the cell size allows: 65535.

Every block has a fixed size. The ANS94 standard set this size to 1024 bytes, which is rather huge for most atmega's (only a few would have enough RAM to handle it). The file `lib/blocks/blocks.frt` has a configurable constant called `blocksize` which is set to 512. This matches the native block sizes of sd-cards too. That way amforth can address 32Mb mass storage.

There is only one block buffer. The usual block commands are available: `block` and `buffer` to load a new block and save a modified block. `update` to mark the current block as modified. To display the block contents two different `list` commands are available: one for text data, and one for generic (binary) data (based upon `dump`). `load` and `thru` work too.

```
> hex 1 list
 0143 FF FF FF FF FF FF FF FF FF FF FF FF FF FF FF FF   ................
 0153 FF FF FF FF FF FF FF FF FF FF FF FF FF FF FF FF   ................
 0163 FF FF FF FF FF FF FF FF FF FF FF FF FF FF FF FF   ................
 0173 FF FF FF FF FF FF FF FF FF FF FF FF FF FF FF FF   ................
 ....
 not modified
> s" .( This is screen #1)" 1 block cmove update
> 1 list
 0143 2E 28 20 54 68 69 73 20 69 73 20 73 63 72 65 65   .( This is scree
 0153 6E 20 23 31 29 FF FF FF FF FF FF FF FF FF FF FF   n #1)...........
 0153 FF FF FF FF FF FF FF FF FF FF FF FF FF FF FF FF   ................
 0163 FF FF FF FF FF FF FF FF FF FF FF FF FF FF FF FF   ................
 0173 FF FF FF FF FF FF FF FF FF FF FF FF FF FF FF FF   ................
 ....
 modified
> flush-buffers \ or load a different block to write back block 1
```

The Block commands to the buffer management and provide the high level access. The actual read and write process is delegated to 2 deferred words: `save-buffer` and `load-buffer`. They get the RAM address of the block buffer and the block number to do the data transfer. They can be changed to talk with various backends. So far the *I2C EEPROM Blocks* serial EEPROM modules and the built-in flash memory are supported. Other targets such as SD-Cards or SPI memory modules can be added as well.

<BUILDS / DOES>

<builds is the older sibling of **create**. It has been in use in pre-ANSI Forth's and is still around as an supplemental tool. It is a parsing word that takes the next word from the input source and creates a dictionary entry in the current word list. Unlike **create** it does not add an execution token. Thus the word list entry created is unfinished and calling it *will* crash the system.

The definition of the word list entry is finished with the **does>** section, that makes the word list entry a proper callable word.

The big advantage over **create** is that **create** requires a rewrite of the contents of the execution token. That is on microcontrollers with the flash based dictionary only possible if a single cell can be re-programmed. The Atmegas can do that with little efforts, the MSP430 lacks essential ressources to do so.

From the programming perspective there are no differences. **<builds** can safely replace **create** in defining words that contain a **does>** section as well. All other occurances of **create** should remain unchanged.

```
: constant create , does> @i ;
\ or
: constant <builds , does> @i ;
```

Using create/does>

The command combination **create** .. **does>** creates a challange on a microcontroller forth which dictionary resides in flash memory since **create** writes the execution token. A subsequent **does>** *replaces* this execution token with some other value. The AVR can reprogram it on the fly, the MSP430 places a much higher burden to achieve it. Due to the size of a single flash page the the sequence `create/does>` works on the AVR8 only.

The combination `<builds/does>` works on all platforms without restrictions as a plug-in replacement.

A subtle error will be made with the following code

```
: const create , does> @ ;
```

This code does *not* work as expected. The value compiled with `,` is compiled into the dictionary, which is read using the `@i` word. The correct code is

```
: const create , does> @i ;
```

Similarly the sequence

```
: world create ( sizeinformation )  allot
  does> ( size is on stack) ... ;
```

does not work. It needs to be changed to

```
: world variable ( sizeinformation) allot
 does> @i ( sizeinformation is now on stack) ... ;
;
```

See also:

Defining and using Arrays <BUILDS / DOES>

Deferred Words

Deferred words a technique that allows to change the behaviour of a word at runtime. This is done by storing an execution token under a certain name that is executed whenever that name is called. The stack effect is entirely that of the stored execution token code. The basic specification is at www.forth200x.org/deferred.html which is a must-read now.

Amforth supports different locations to store the execution token. The AVR8 provides 3 different variants: **Edefer** stores in EEPROM, **Rdefer** stores in RAM and **Udefer** stores in the USER area. The MSP430 has only RAM (Rdefer) since flash is not changeable, except the info flash area.

Depending on the storage location, different initalization actions may be required at startup. Only the AVR8 EEPROM based defers work without further actions and every changes are kept likewise.

Assigning a new execution token uses the command **IS** for all defers, regardless of the actual location used.

AmForth uses the deferred words technique internally:

- **turnkey** is an EEPROM (AVR8) or info flash (MSP430) based deferred word that is executed from **QUIT** during startup and reset.
- the words **key**, **key?**, **emit**, and **emit?** are USER deferred words for low level terminal IO. (AVR8)
- **refill** and **source** are USER deferred words used by the forth interpreter to get the next command line.
- **pause** is a RAM based deferred word that is called whenever a task switch can be done. It is set to **noop** per default.

- **!i** does the actual flash write of a single cell. It is intended for *Unbreakable AmForth* (AVR8)

Since there is no standard **defer** word, the developer has to choose where to store the execution tokens. An EEPROM location is keept over resets/restarts and is valid without further initialization. A USER based deferred word can be targeted to different words in a multitasking environment and finally a RAM based deferred word can be changed frequently.

How Defers work

Defers store an execution token. When the name of the defered word is called, they fetch this token and execute it. When the name is compiled into another definition, this fetch-execute happens when calling this other word. That way even a compiled deferred word can be changed later on since it's only the defer definition that got compiled, not its content.

```
> Xdefer foo
> : bar foo ;
> ' words is foo
> bar
 <long list of words>
> ' noop is foo
> bar
 <nothing>
>
```

Xdefer is one of the various defer defining word. Regardless of the actual type, all defers behave the same way.

The defer defining words are created with the same design:

```
: Rdefer ( "name" -- )
    (defer)
    here , 2 allot
    [: @i @ ;] , \ used to read
    [: @i ! ;] , \ used by IS
;
```

The first command **(defer)** creates the dictionary entry "name" and sets up the runtime behaviour (execution token). The next line allocates a memory region (RAM in the example) and compiles its address. The two quotations are called to access the data item. They are called with the address of the compiled address (thus the **@i**). That way two memory accesses are performed: first is to get the address from the dictionary entry the second to fetch/store from/to the address in the right memory pool.

Sealing Defers

It is sometimes necessairy to prevent a deferred word from changing. This can be achieved with the following word

```
: defer:seal ( XT -- )
 dup defer@ ( -- XT' XT )
 swap ( -- XT XT')
 dup ['] quit @i ( get DO_COLON) swap !i
 1+   dup rot swap !i
 1+ ['] exit swap !i
;
```

With it, the dictionary entry is patched directly to change it from beeing a defer to a colon word named as the deferred word calling only the current XT stored in it

```
(ATmega32)> Edefer mytest
 ok
(ATmega32)> ' ver is mytest
 ok
(ATmega32)> mytest
```

```
 amforth 5.3 ATmega32 ok
(ATmega32)> ' mytest 5 - 10 idump
 10E0 - FF06 796D 6574 7473 10CB 0836 005C 07D6   ..mytest..6.\...
 10E8 - 07E0 FFFF ...
 ok
(ATmega32)> ' mytest defer:seal
 ok
(ATmega32)> ' mytest 5 - 10 idump
 10E0 - FF06 796D 6574 7473 10CB 3800 078C 381A   ..mytest...8...8
 10E8 - 07E0 FFFF ...
 ok
(ATmega32)> mytest
 amforth 5.3 ATmega32 ok
(ATmega32)>
```

Technically the word `mytest` is changed to the same dictionary content as if it was defined as

```
: mytest ver ;
```

This is possible since a deferred word occupies 3 flash cells in the body and the faked colon definition needs only 2: the XT of the deferred word and the exit call.

Disabling the terminal command echo

Sometimes it may be desirable to turn off the echo function in **accept** when entering commands. One solution to do it is to temporarily redirect the **emit** to do nothing.

```
variable tmpemit
: -emit ['] emit defer@ tmpemit !
       ['] drop is emit ;
: +emit tmpemit @ is emit ;
```

```
> 1 2 3
ok
>  .s
  0 809 3
  1 80B 2
  2 80D 1
ok
> -emit .s +emit
ok
>
```

Alternately the definition

```
: +emit tmpemit @ ['] emit defer! ;
```

could be used as well.

Interrupt Service Routines

An interrupt can occure any time. Interrupts are handled with standard forth words. They must not have any stack effect.

The interrupt forth word is executed within the context of the current user area and stack frame. Using `throw` is not recommended since it will affect the user area of the interrupted task.

+int (–) enable the interrupt handling globally

-int (–) disable the interrupt handling globally

int@ (**n – XT**) fetch the XT of the interrupt service routine for interrupt n

int! (XT n –) store the XT as the handler for interrupt n. This has immediate effect.

int-trap (n –) simulate interrupt n

Interrupts are processed in two stages. First stage is a simple low-level processing routine. The low-level generic interrupt routine stores the index of the interrupt in a CPU register.

The inner interpreter checks *every* time it is entered the register for a non-Null value. If it is set the interrupt processing routine is activated. It uses the interrupt number and calculates the index into an platform specific table (AVR uses the EEPROM, the MSP430 the index flash).

Defining and using Macros

Macros are small code snippets that do not represent a colon word for itself but the code is used verbatim in other definitions. To use them, include the file `lib/macro.frt` (requires `evaluate.frt` and amforth version 4.7ff)

```
>  macro square " dup *"
ok
>  : foo 5 square . ;
ok
>  foo
25  ok
```

square can be called just like a word definition as well.

```
> 6 square .
36 ok
>
```

There is only one drawback: the macro string cannot contain the delimiting character itself. You're free to choose any character however

```
>  macro square2 _ dup *_
ok
>  5 square2 .
25  ok
>
```

Multitasking

Multitasking is a way to execute separate chunks of program code (tasks) apparently simultaneous on a single CPU. Of course, the separate tasks will run one after another. If the CPU can switch between them fast enough, separate tasks may appear to execute in parallel.

Multitasking in amforth is achieved as *cooperative multitasking* [1]: In every task the programmer defines places, where control is given up, such that the next task can run. The tasks current state is stored in a piece of memory called the task control block (TCB). TCBs are organized in a simple, linked list and are visited in round–robin fashion.

What is a Task?

Every task owns a piece of RAM, where it finds a set of runtime information (user area) and where it has its own space for the data and return stacks. This space is called a *task control block (TCB)*. Is is referred to by the *task id* or *tid*, which happens to be the start address of the TCB by convention[#]_

The runtime information includes:

- status, whether the task is *awake* or *sleeping*

[1] as opposed to preemptive multitasking

- follower, points to the next task in the list
- where do the stacks start and how many entries are currently on them
- the current value of **base**
- pointers to deferred words such as **key**, **emit** and the like
- the content of the stacks is not regarded part of the task control block. They can be located anywhere as long as their location is known. They do belong to the task, however.

Viewed from afar, a task is just a piece of RAM holding a small set of important information.

Switching Tasks

To switch execution from one task to the next, the following things need to happen somehow:

- store the relevant bits of the current runtime in the task control block (stack pointers, mainly)
- look up the next task's control block
- switch the userarea-pointer to that control block
- unfold the same bits, which were stored before giving up control, back into the runtime
- resume execution at the next instruction of the new task

So the problem is mainly an exercise in saving and restoring all relevant information.

Using the Multitasker

Problem

Simultaneous execution of several blocks of code (tasks) is desired on a single CPU.

Solution

Include the file `lib/multitask.frt` in your programm, define separate tasks as separate words. The start of everything needs a little extra code (see starttasker). This solution is working together with turnkey.

Sample Program

The following example creates two tasks:

1. the command loop keeps running
2. increment a Counter N, write its value to PORTB. The intention is to make connected LEDs blink.

```
\ run_multitask -- tested with amforth-4.7, atmega-32

$38 constant PORTB
$37 constant DDRB
include lib/multitask.frt
\ load the multitasker
: ms ( n -- ) 0 ?do pause 1ms loop ; \ call pause on wait
variable N
: init
  $ff PORTB c!
  \ portB: all pins high
  $ff DDRB c!
  \ all pins output
  0 N !
```

```
;
: run-demo
 \ --- task 2 ---
 begin
   N @ invert PORTB c!
   1 N +!
   &500 ms
 again
;
$20 $20 0 task: task_demo
\ create task, allot tcb + stack space
: start-demo
  task_demo tib>tcb activate
  \ words after this line are run in new task
  run-demo
;
: starttasker
  task_demo task-init
  \ create TCB in RAM
  start-demo
  \ activate tasks job
  onlytask
  task_demo tcb>tid alsotask
  multi
;
: run-turnkey
  \ make cmd loop task-1
  \ start task-2
  \ activate multitaskingMultitasking
  applturnkey
  init
  starttasker
;
' run-turnkey is turnkey
\ make run-turnkey start on power up
```

When the program is started, LEDs connected to PORTB will blink. However, the prompt is presented as well and commands will be handled.

```
> run-turnkey
amforth 6.3 ATmega32
ok
> tasks
149
running
309
running
Multitasker is running ok
> N @ .
199 ok
>
```

Discussion

The two tasks will happily run along provided, that both tasks call **pause** regularly. This call is built into the command loop already. It is possible to call **run-turnkey** as **turnkey**. The program will survive a power cycle, because task: stores the neccessary information in flash memory:

1. the address of the task control block
2. the start of the data stack (sp0)
3. the start of the return stack (rp0)

The sizes of the stacks are not explicitly stored. They can be inferred from the knowledge that all space is allocated as one chunk. However, amforth does not protect the stack from overflows. Exceeding the allocated stack space does cause unexpected crashes of your programm (see below at **task:**).

task-init prepares the task control block located in RAM. It erases any previous content, stores the addresses of the stacks, the top–of–stack address for the data stack, base, and the status of the task (sleeping). start-demo adds the calls to the tasks body into the TCB and stack space. task: will use three entries from the stack.

1. additional size of the user area in this task. This space can be used to create user–variables, which belong to this task only.
2. size of the task's return stack
3. size of the task's data stack. Both stack sizes may be as small as $20 bytes. However, programs

exceeding a certain complexity may experience inexplicable crashes. If the program works in the foreground but not as a task, increasing the stack sizes may help. Please note that calling **ms**, which in turn calls 1ms will not produce accurate time intervals any more, depending on how much time is spent in the other tasks. One might argue that the startup sequence (starttasker) is way too long and should not be handled by the programmer. On the other hand, full control over the startup might be useful in unforeseen ways.

Multitasker: The Gory Details

amforth ships the file `lib/multitask.frt` featuring a multitasker based on code by Brad Eckert.

Task Control Block

The layout of the task control block is fixed. Technically it is located at the start of the so called *User Area*. The first 6 entries (status ... handler) are not intended for changes by the programmer. The next 6 entries (base ... /key) are commonly changed by the programmer. If more space for user variables is desired, the user area needs to be increased specifically. When defining user variables, the offset of that variable from the start of the user area needs to be specified. It is the programmers duty to keep track of how many entries have been used.

Also as a consequence the tid of a task holds the start address of the user area for that task. Its value is copied into the user pointer upon task switch. The user pointer is fetched and stored with up@ and up!, respectively (see definition of wake below).

Two offsets into the TCB are defined as user variables. They produce the address of TCB[0] and TCB[2] respectively, correctly using the current TCB's address.

```
decimal
0 user status
2 user follower
```

After that two noname: words are defined. These words will not have a header in the vocabulary, their execution tokens (xts) are stored in the constants pass and wake. Their values will be stored in the status field (TCB[0]).

```
:noname ( 'status1 -- 'status2 )
  cell+ @ dup @ 1+ >r
; constant pass
:noname ( 'status1 -- )
  up! sp @ sp! rp!
; constant wakeMultitasking
```

Switching Multitasking on and off

To switch between tasks the deferred word pause is used. Normally, pause does nothing. Therefore turning multitasking off is simple:

```
\ stop multitasking
: single ( -- )
  ['] noop is pause
;
```

A new word multitaskpause is defined, which will switch from this to the next task.

```
\ switch to the next task in the list
: multitaskpause ( -- )
  rp@ sp@ sp ! follower @ dup @ 1+ >r
;
\ start multitasking
: multi ( -- )
  ['] multitaskpause is pause
;
```

multitaskpause looks short and innocent, but a little explanation is called for:

```
rp@       \ -- rp                | fetch the current return stack pointer
sp@       \ -- rp sp             | fetch the current data stack pointer TOS
sp        \ -- rp sp tcb[sp]     | get the addr of user variable to store TOS
!         \ -- rp                | store, TCB[8] := TOS
follower  \ -- rp tcb[2]         | get the address of TCB[2]
@         \ -- rp tid'           | fetch it's content, tid of the next task
dup @     \ -- rp tid' status'   | fetch status of the next task (xt)
1+        \ -- rp tid' pfa       | xt \Verb|>body|
>r        \ -- rp tid'           | put pfa of pass or wake on the returnstack
```

When multitaskpause exits, the interpreter finds the xt of wake or pass on the return stack and will continue execution there.

If status was pass, the next task is sleeping, so we need to look for the next next task:

```
          \ -- rp tid'           | these are still on the stack
cell+     \ -- rp tid'[2]        | point to follower
@         \ -- rp tid''          | get the tid of the next next task
dup       \ -- rp tid'' tid''    |
@         \ -- rp tid'' status'' | fetch status of next next task (xt)
1+        \ -- rp tid'' pfa      | xt of >body
>r        \ -- rp tid''          | put xt of next next tasks status on return stack
```

This is repeated until an awake task is found. If status was wake, the next task should be running, so we need to unfold it:

```
    \ -- rp tid' these are still on the stack
up! \ -- rp make user pointer point to tid'
```

This was the magic line. Now the stacks are different stacks! We left the old task's data stack behind with rp on top. Now we look at the new task's stack and find rp' of that task on top of it.

```
sp   \ -- rp'
     \ -- rp' tid'[sp] get addr of TOS locationMultitasking
@    \ -- rp' sp' retrieve stack pointer of now current task
sp!  \ -- rp'     store it in (activate) stack pointer
rp!  \ --         store rp' of this task in current rp
```

Switching multitasking on is simply pointing pause to multitaskpause. The inner workings are far from obvious, but they have been proven to work.

Handling tasks

We need a few words to change the status of tasks:

```
: stop
: task-sleep
: task-awake      ( -- )
   pass status ! pause ; \ sleep current task
   ( tid -- ) pass swap ! ;
   \ sleep another task
   ( tid -- ) wake swap ! ;
   \ wake another task
```

A little more tricky is setting up a piece of code to be run in a task. **activate** will be used in a snippet similar to this.

```
: run-demo ( interesting work here ... ) ;
$20 $20 0 task: task_demo
\ create task, allot tcb + stack space
: start-demo
 task_demo tcb>tid activate
 \ words after this line are run in new task
 run-demo
;
```

activate will store the xt of **run-demo** on the return stack belonging to the TCB. It will also save the address of top of return stack on top of the data stack belonging to the same TCB, and the address of TOS in the field TCB[sp]. This particular order of information is expected by **wake**.

```
: cell- negate cell+ negate ;
\ continue the code as a task in a predefined tcb
: activate ( tid -- )
   dup
   6 + @ cell-
   over
   4 + @ cell- ( -- tid sp rp )
   \ point to RP0 SP0
   r> over 1+ !
   ( save entry at rp ) \ skip all after ACTIVATE
   over !
   ( save rp at sp )
   \ save stack context for WAKE
   over 8 + !
   ( save sp in tos )
   task-awake
;
```

onlytask initializes the linked list with the current task only. It copies the tid of the current task into the field TCB[follower] to create a circular list.

```
\ initialize the multitasker with the current task only
: onlytask ( -- )
  wake status !
  \ own status is running
  up@ follower ! \ point to myself
;
```

alsotask links a new task given by its tid into the list behind the current task.

```
: alsotask ( tid -- )
   ['] pause defer@ >r \ stop multitasking
   single
   follower @ ( -- tid f)
   over       ( -- tid f tid )
   follower ! ( -- tid f )
   swap cell+ ( -- f tid-f )
   !
```

```
   r> is pause \ restore multitasking
;
```

And then there is **tasks** to print the tid of every task in the list and its state to the serial console. It will also report, whether the multitasker is switched on or not. If you uncomment the three commented lines, then the values of top–of–stack and start–of–stack for the data and return stacks are also printed out. This might be useful for debugging.

```
: tasks ( -- )
  status ( -- tid ) \ starting value
  dup
  begin
    ( -- tid1 ctid )
    dup u. ( -- tid1 ctid )
    dup @ ( -- tid1 ctid status )
    dup wake = if ." running" drop else
        pass = if ." sleeping" else
          abort" unknown" then
        then
    \     dup 4 + @ ." rp0=" dup u. cell- @ ." TOR=" u.
    \     dup 6 + @ ." sp0=" dup u. cell- @ ." TOS=" u.
    \     dup 8 + @ ." sp=" u. cr
    cell+ @ ( -- tid1 next-tid )
    over over =      ( -- f flag)
  until
  drop drop
  ." Multitasker is "
  ['] pause defer@ ['] noop = if ." not " then
  ." running"
;
```

Creating a TCB

So there is only one thing left to do, namely create space for a TCB and the stacks.

```
: task: ( C: dstacksize rstacksize add.usersize "name" -- )
 ( R: -- addr )
 create here ,
   \ store address of TCB
   ( add.usersize ) &24 + allot \ default user area size
   \ allocate stacks
   ( rstacksize ) allot here , \ store sp0
   ( dstacksize ) allot here , \ store rp0Multitasking
   1 allot \ keep here away, amforth specific
 does>
 \ leave flash addr on stack
;

 : tcb>tid ( f -- tid )      @i ;
 : tcb>sp0 ( f -- sp0 ) 1+  @i ;
 : tcb>rp0 ( f -- rp0 ) 2 + @i ;
 : tcb>size ( f -- size )
    dup tcb>tid swap tcb>rp0 1+ swap -
 ;
```

task: allots memory for the task control block and its associated stacks. The sizes of the stacks are taken from the data stack. The start of the data stack (SP0) is stored in TCB[6], the start of the return stack (RP0) is stored in TCB[4]. Then new tid is moved from the return stack to the data stack. The task is marked as sleeping and one more byte is allot'ed to keep here out of the way. This is an implementation feature of amforth. Also please note that stacks are growing downwards. **task-init** initializes a TCB and copies the information stored in flash into their correct locations.

```
: task-init ( f -- )
 dup tcb>tid over tcb>size 0 fill \ clear RAM for tcb and stacks
 \ fixme: possibly use init-user?
 dup tcb>sp0 over tcb>tid &6 + !
 \ store sp0 in tid[6]
 dup tcb>sp0 cell- over tcb>tid &8 + ! \ store sp0-- in tid[8], tos
 dup tcb>rp0 over tcb>tid &4 + !
 \ store rp0 in tid[4]
 &10 over tcb>tid &12 + !
 \ store base in tid[12]
 tcb>tid task-sleep
 \ store 'pass' in tid[0]
;
```

Versions of `lib/multitask.frt` prior to amforth-4.7 are broken in that there is no permanent storage as described above. These versions of the multitasker work, but they do not survive a power cycle.

Pitfalls

Using Forth on a microcontroller is something different to work on a PC. Some potential pitfalls are discussed here.

Memory content

On the PC restarting the Forth system resets the dictionary content. On the microcontroller, the dictionary is unchanged, but the RAM contents is totally different. You definitly need a proper initialization phase for each and every byte in RAM. Starting with version 5.9 amforth cleans all RAM content to 0, older version keep it unchanged.

Stack depth's

The standard stack depth is 40 cells for both return and data stacks. A well written program may never reach that limit. Using interrupts may cause trouble if they happen in a nested way. For speed reason, amforth does not check the stack depth's itself. You can check them with a marker byte (e.g.$dead) at the stack limit that is checked regularily.

Prompts

Since release 6.3 amforth has three redefinable prompt words. They are called in the outer interpreter **quit**:

```
: quit ( -- )
   lp0 lp ! sp0 sp! rp0 rp! \ setup the stacks
   [ \ switch to interpret mode
   begin \ an endless loop begins
     state @ 0= if .ready then
     refill if
       ['] interpret catch
       ?dup if
         dup -2 < if .error then
         recurse \ restarts without turnkey
       then
     else
      .ok
     then
   again ;
```

The **.ready** is called whenever the system signals its readyness for input. It's default starts a new line and displays the > character. The definition is

```
USER_P_RDY Udefer .ready
:noname ( -- ) cr .">  " ; is .ready
```

After this prompt, the **refill** action is called when the command line has been processed. The **.ok** prompt word is used when the input line has been processed successfully. It's default displays the "ok" string

```
USER_P_OK Udefer .ok
:noname ( -- ) ." ok " ; is .ok
```

The third prompt word is called whenever the systems detects an error or an unhandled exception. It default prints the exception number and the position in the input buffer where the error has been detected

```
USER_P_ERR Udefer .error
:noname ( n -- ) ." ?? "
   \ print the exception number in decimal
   base @ >r decimal .
   \ print the position in the input buffer
   >in @ .
   \ restore base
   r> base !
; is .error
```

The :nonames indicate that the default actions don't have a name in the dictionary. The defers are stored in the USER area since all other words related to command IO are there too. Any replacement words are expected to follow the stack diagrams otherwise the system may crash.

Redirect IO

The IO system consists of 4 words: **EMIT**, **EMIT?**, **KEY** and **KEY?**. The are deferred words, e.g. they can be changed at runtime.

Output

Amforth has many words like **."** and `type` to write information. All these words do not do the output work actually, they call `emit` for each and every single character.

```
: morse-emit ( c -- )
  ... \ some code to let a buzzer beep for the character c
;
' morse-emit is emit
\ now everything gets morsed out. even the prompt
\ unless your morse-emit does not call the previous
\ emit nothing will be displeyd
s" let it beep" type
```

The same technique may be used for e.g. a 44780 LCD. The new code has to take care of everything like scrolling etc as well.

To complete the picture, another word `emit?` should be redefined. It is called in front of <emit> to check whether the output is possible. If no such check is necessary or possible, just do an `' true is emit?`

Unless you do not change the turnkey action as well, everything gets reset to serial IO whenever you call `WARM`.

Input

Input is based upon single characters. The command **key?** checks whether an unread character is available and **key** fetches it. To read an user supplied buffer, the command **accept** can be used. It reads until either the buffer is filled or an end-of-line character is found (caridge return and/or line feed).

Depending on the input source, different strategies may be used. The simplest way is to poll the input device frequently and hope that no character is lost. More sophisticated is the use of interrupts. They can be called at any time and almost guarantee that no characters will be lost. The interrupt usually fills an internal small buffer **key** and **key?** can deal with.

```
: ps2-key-isr ( -- )
 \ get the most recent key stroke
 \ place the key-event in a queue
;
: ps2-key? ( -- f )
 \ check the input queue, return true if
 \ a key-event is unread
;
: ps2-key ( -- c )
 \ read and unqueue the oldest key-event from the
 \ queue.
;
\ the next word changes the terminal input to
\ the PS2 based system. This cannot be done interactivly!
: ps2-init ( -- )
 \ initialize ps2-key-isr
 ['] ps2-key? is key?
 ['] ps2-key  is key
;
```

There are some notes that may affect your program

- If a multitasker is used take care to include calls to `pause` in your `key?` and `emit?` definitions.
- It is not uncommon that `key` calls `key?` in a loop until a character is available.
- AmForth uses one of the following words depending on the WANT_RX_ISR settings. It defaults in `preamble.inc` to WANT_RX_ISR=1.

WANT_RX_ISR	
0	1
rx-poll and rx?-poll	rx-isr and rx?-isr

- All IO words with more complexity (e.g. `type` or `accept` call any of the 4 deferred words. There is no need to change them.
- Amforth uses the control characters for the line editing (e.g. backspace, TAB, CR/LF). Characters are 8 bit numbers (ASCII). Multibyte-Characters are not currently supported.

See also:

Disabling the terminal command echo

Simple Strings

On the command line, strings are part of the current SOURCE buffer. Their content is usually lost, when SOURCE gets REFILL'ed. The command

```
> s" hi there" type
 hi there ok
>
```

works fine. If you split the commands into two lines like

```
> s" hi there"
 ok
> type
 ei there ok
>
```

it will print the last character of `type` and the remaining characters from the previous command line. If a string has to be used later on, it needs to be moved to another buffer within the same command line or `accept` is used to enter the string into some other buffer (see below for an example).

```
> s" hi there" pad swap cmove> \ length information gets lost
 ok
> pad 7 type
 hi ther ok
>
```

In colon definitions, **`s"`** does something completely different: It copies the whole string from the **`SOURCE`** buffer to flash (into the dictionary) and at runtime provides the flash address and length of the string. This data can be used with e.g. **`ITYPE`**.

```
\ allocate RAM for the string content.
20 buffer: namestring
variable age

\ enter string and print them
: input ( buf-addr buf-len prompt-addr prompt-len -- buf-addr buf-len )
 cr itype over swap accept ;

: getname  ( -- addr len )
   namestring 20
   s" Who are you? " input ; \ [1]
: getage
        0. \ [2]
    pad 3  \ [3]
    s" How old are you? " input
    >number 2drop d>s     \ [4]
    age ! ;;

: .name    ( addr len -- ) type ;
: .age     (  -- ) age @ u. ;

: .hallo   cr ." Nice to meet you"
   .age ."   year old "
   .name                  \ [5]
   ." ." cr ;

\ putting it all together
: ask      getname getage .hallo ;
```

Running the command `ask` gives the following session

```
> ask

Who are you? Hannu

How old are you? 23

Nice to meet you 23 year old Hannu.
 ok
>
```

Notes

1. **`s"` compiles a string into flash. The compiled string gets a** runtime that leaves the address/length pair of the compiled string *and* skips its content for further program execution.
2. **Places a double cell zero value onto the stack to be used at** `>number`.
3. **`pad` is a commonly used temporary storage pool. It** is not used by the system itself. Its location is relative to HERE, so every change to HERE will move PAD as well.

4. **`>number` is a standard word that converts a string** to a number. To get the actual age (assuming a reasonable value) the **`2drop`** removes some returned data. Finally the double cell age is converted to single cell and stored at the variable `age`.

5. **`getname` leaves the actual length of the name string** on the stack. This length information is not stored elsewhere. `.name` removes this information so you cannot reconstruct this data.

```
> : label: create s, , does> ;
 ok
> 42 s" hello" label: example
 ok
> example icount itype
 hello ok
> example icount 2/ 1+ + @i .
 42 ok
>
```

`s,` copies a string from RAM to flash, increasing the DP. The storage format follows the counted string schema: first cell is the length information, followed by the characters, 2 per flash cell. A zero byte is appended if necessary to fill the last flash cell. It is an internal factor of `s"`.

This recipe is based upon ideas from Hannu Vuolasaho and Michael Kalus.

Structures

Structures are used to keep complex data in one place. Classical use cases are records.

To use structures, load the file `lib/forth200x/structure.frt` into the controller. It has no further dependencies.

```
\ simple test example for forth200x structures
\ define a new data structure named list.

begin-structure list
  field: l.p   \ previous
  field: l.n   \ next
  field: l.d   \ data
end-structure

\ create an instance of the datastructure list
\ named listroot

list buffer: listroot

\ access an element from the instance
$55aa listroot l.d !

\ place a structure at a special place
begin-structure atmega-port
  cfield: PIN
  cfield: DDR
  cfield: PORT
end-structure

\ Atmegas have 3 addresses per port, use
\ the lowest one here
$39 constant PORT-A

\ set all pins to output
$ff PORT-A DDR c!
```

The example shows a few aspects that should be known:

- field names are global entries in the dictionary, one should choose good names for them. Names like `a` are a no-go. One possibility is the schema structure-name->fieldname
- structures keep definitions in flash, the data goes to RAM.

The package works with amforth version 4.0 and newer.

See also:

Defining and using Arrays

Loop With Timeout

Many low level routines require to wait for a specific condition come true: A transmission is finished, a flag is set etc. Most of the time these action do work fine. But sometimes, the check loop does not terminate for some (usually stupid) reason and the program essentially crashed.

```
\ wait for twi finish
: twi.wait ( -- )
 begin
   TWCR c@ 80 and
 until
;
```

To circumvent such unwanted endless loops, a timeout is often a solution. This ensures that the loop will be left, regardless what happens. This recipe is based upon the timer module from the `lib/hardware` directory, that provides a millisecond tick that can be used for timeouts as well.

A timeout loop is basically a modified begin that takes a runtime parameter: the maximum allowed time for a particular loop. The loop terminater (again, until, etc) is left unchanged. If the loop terminates properly, the timeout is ignored, otherwise an *exception* is thrown. It is up to the programmer to catch that exception. If it is not catched, the forth interpreter will do it and returns to the command prompt.

```
\ timeout-begin is a potentially endless loop
\ that terminates after a predefined timeout

\ in the case of a timeout an exception is thrown
variable alarmtime
: (init-alarm)
  @tick + alarmtime !
;

: (check-alarm)
  alarmtime @ expired? if -512 throw then
;

: timeout-begin
   postpone (init-alarm)
   postpone begin
   postpone (check-alarm)
; immediate
```

Since the alarm checks are simple, some precautions should be obeyed:

- The timer gives a millisecond resolution.
- The longest timeout period is 65.535 seconds (slightly more than a minute).
- **The timeout-loop cannot be nested. If you want to use it in a multitasking** environment, change the variable to a user.
- Don't forget to initialize and start the timer.

```
\ testcase. timeout after 100ms
: foo
```

```
 100 timeout-begin
   noop
 again
;
```

Trouble Shooting

There are several pit falls, one may fall into. There are two milestones for a working amforth: A working command prompt and a successful compilation.

No prompt

By experience: check your hardware. Check whether you use the serial port that you configured in amforth. Many atmegas have more than one serial port and usually the wrong one is configured.

Next check the baud rate *and* the cpu frequency. They must match the configured numbers. There are some fuses as well that affect the cpu frequency. Check them too!

Failed to compile

If your prompt works, the compile step may fail as well. A definition may not return to the command prompt or any further command fails without any message. There are usually two reasons: The fuses and the fuses.

Amforth requires that the whole NRWW section is used for the bootloader. If the bootloader section is smaller than the maximum (largest) NRWW size, compilation fails.

Another sensitive fuse is the boot reset vector (bootrst). It *has to* point to address 0, *not* to the NRWW section. Usually it means to set it to off value.

Turnkey applications

Turnkey application automatically execute a word upon startup. The default turnkey action establishes the serial line communication and prints the welcome messages (version number, cpu name, frequency). When the turnkey action finishes, the control is handed over to the amforth interpreter loop, which never finishes.

Turnkey itself is a deferred word. That means that it can be changed by applying a new execution to it. Whether the turnkey action leaves data on the stack is up to the application needs. Turnkey is called with an empty data stack.

```
: myinit ( -- )
  \ some code
;

\ save the xt of myinit into turnkey vector (an eeprom variable)
' myinit is turnkey
```

Special care must be taken if the turnkey action should not be replaced but appended. To achieve this, the current turnkey action has to be stored elsewhere and this execution must be called inside the new turnkey command.

```
\ some dependency files
\ #include avr-values.frt
\ #include is.frt
\ #include ms.frt
\ #include defers.frt

\ keep the previous turnkey action.
' turnkey defer@ Evalue tk.amforth

: tk.custom
```

```
\ call the previous turnkey action
tk.amforth execute

\ now something specific e.g.
1000 ms
;

' tk.custom is turnkey
```

Be aware that the initialization sequence must not be repeated, this will create an endless loop by calling the turnkey action inside itself.

Shells And Upload

amforth-shell.py

The amforth-shell.py from Keith Amidon may simplify the interaction with amforth and the forth code management while uploading projects.

It is a python2 script that runs fine on Linux, other platforms may work as well. The tool takes care of the correct transfer of the source code and will optionally pre-process the sources: e.g. replace the register names with their numeric values. This saves valuable flash (dictionary) space since most of these registers are used only once.

```
 mt@ayla:~/amforth$ cat tools/test.frt
\ this is a test
INT1Addr .
ver 1000 ms cr
1000 ms
ver cr ver
1000 ms
mt@ayla:alias|grep amforth-shell
alias u0='$HOME/amforth/tools/amforth-shell.py -p /dev/ttyUSB0 --no-error-on-output'
mt@ayla:~/amforth$ u0 test.frt
|I=mcudef
|I=using device.py for atmega1280
|F=....test.frt
|C|    1|\ this is a test
|S|    2|INT1Addr .
|O|    2|4
|S|    3|ver 1000 ms cr
|O|    3|amforth 4.9 ATmega1280
|S|    4|1000 ms
|S|    5|ver cr ver
|O|    5|amforth 4.9 ATmega1280
|O|    5|amforth 4.9 ATmega1280
```

Note the replacement of the INT1Addr with 4 in line 2. This is done by using the device.py file from the core/devices/atmega1280p directory which is automagically identified and loaded at startup. And second note, that the file is found automatically in the subdirectory tools.

The amforth-shell.py utility has a lot of more features: an interactive command prompt with dynamic command completion and command history (stored across multiple invocations), a lot of runtime checks and so on. To enter an interactive session, just call it with the port name

```
mt@ayla:~/amforth$ u0 -i
|I=Entering amforth interactive interpreter
|I=using device.py for atmega1280
(ATmega1280)> # (and pressing TAB twice)
#                    #directive          #exit               #quote-char-word     #tib
#update-cpu          #edit               #ignore-error       #s                   #timeout
#update-words        #cd                 #error-on-output    #include             #string-start
```

```
#timeout-next
(ATmega1280)> #
```

Note that not all words displayed here are actual commands on the controller itself. The terminal provides commands itself, they start with a # (hash mark).

To locate the files, the utility checks the current work directory or, if set, the directories from the environment variable AMFORTH_LIB. Be careful when using a directory with many files, the startup may take a long time due to the directory tree scanning.

```
mt@ayla:~/amforth$ grep AMFORTH ~/.profile
AMFORTH=~/amforth
AMFORTH_LIB=$AMFORTH/lib:$AMFORTH/examples
export AMFORTH_LIB
mt@ayla:~/amforth$
```

e4thcom - A Terminal For Embedded Forth Systems

Manfred Mahlow has a nice tool for working with various Forth's. It works primarily on Linux systems and supports among other things uploading of source code to remote systems.

More information and downloads are available at http://wiki.forth-ev.de/doku.php/en:projects:e4thcom

Programming and Debugging

Forth Assembler

Amforth is written in assembly language. Writing assembly words usually requires a rebuild of the hex files and flashing them to the controller. Lubos Pekny developed an assembler that runs within amforth and does not require a change of the amforth sources. Its syntax is a mixture of the standard Atmel assembly and forth. The mnemonics are close to Atmel's. The forth influence leads to a postfix notation and that the words that do the actual code generation end with a comma.

Start

To use it, load the file `lib/assembler.frt` and its dependencies into a running amforth. The assembler uses word lists to organize itself. The assembler supports all common mnemonics regardless of the controller type.

The assembler words are in a seperate word list. To activate it, the following sequence is typically used:

```
forth only also assembler
```

This resets the word list order and adds the assembler word list. After successfully compiling the assembler word, the word list can be removed with `previous`.

Simple Example

The example uses the assembler for words that could easily be written in plain forth. Nevertheless an implementation in assembler is done. The code itself it taken from a posting on Roboforum.RU

```
$2F constant tccr1a
$2E constant tccr1b

\ stop timer1
\ : t1> 0 TCCR1 c! ;
 code t1>
       tccr1b R2 out,
```

```
end-code

\ start timer1 @ normal mode, prescaler=8 ( 1us counter @8MHz )
\ : <t1 2 TCCR1 ! ;
code <t1
      R17    2   ldi,
      tccr1a R2  out,
      tccr1b R17 out,
end-code
```

The new words can be used just like a ordinary forth words.

```
\  stop timer1 & zero counter
: <t1>  t1> 0 dup TCNT1H c! TCNT1L c!   ;

\  show t1 counter
: .t1
        TCNT1L c@ TCNT1H c@ 8 lshift + dup
        ." (0x" .x ." )" bl emit u. ." us"

        TIFR dup c@ $4 and dup      \ test  TOV1 flag
        if bl emit ." overrun"
           over c@ or swap c!      \ clear TOV1 by writing'1'
        else drop drop then cr
        ;

 \ timing test using timer1, xt - executable address
  : ?us   <t1> <t1 execute t1> .t1 ;    ( *x xt -- *y )
```

Build Timestamp

AmForth has a version number, that can be read with an environment query:

```
> s" version" environment? drop .
50 ok
> s" version" environment search-wordlist drop .
50 ok
>
```

In addition to this information (esp for those who use the newest revision from the source repository) the built timestamp maybe useful as well. To get it, AmForth needs to be compiled with the file `words/built.asm` included. Calling it prints the date and time the hexfile was generated in the current terminal.

```
> built
Nov 22 2012 23:12:94 ok
>
```

The assembly code uses some avr asm specific macros, the string length information is hardcoded.

```
; ( -- ) System
; R( -- )
; prints the date and time the hex file was generated
VE_BUILT:
   .dw $ff05
   .db "built",0
   .dw VE_HEAD
   .set VE_HEAD = VE_BUILT
XT_BUILT:
   .dw DO_COLON
PFA_BUILT:
   .dw XT_DOSLITERAL
   .dw 11
```

```
    .db __DATE__ ; generated from assembler
    .dw XT_ITYPE
    .dw XT_SPACE
    .dw XT_DOSLITERAL
    .dw 8
    .db __TIME__ ; generated from assembler
    .dw XT_ITYPE
    .dw XT_EXIT
```

Subversion Revision Number

If you are using the subversion sandbox from the sourceforge repository, the following solution from Enoch provides the subversion revision number.

His solutions extends the Makefile to generate a small forth snippet that contains the information as a string.

```
AMFORTH := ../amforth/trunk
CORE := $(AMFORTH)/core
DEVICE := $(CORE)/devices/$(MCU)

SVNVERSION := `svnversion -n $(AMFORTH)`

$(TARGET).hex: $(TARGET).asm *.inc words/*.asm $(CORE)/*.asm $(CORE)/words/*.asm
$(DEVICE)/*.asm
       $(XASM) -I $(CORE) -o $(TARGET).hex -e $(TARGET).eep -l $(TARGET).lst $(TARGET).asm
       echo ": svnversion .\" r$(SVNVERSION)\" ;" >svnversion.frt
```

Running make creates the file `svnversion.frt` in the current directory that contains the output of the `svnversion -n` command. Uploading this file creates the forth command _svnversion_ that prints it in the terminal.

```
\ #include svnversion.frt

: myturnkey
\ snip
   applturnkey
   space svnversion
;

' myturnkey is turnkey

\        The result:
\        ~~~~~~~~~~~

       amforth 4.9 AT90CAN128 r1306M
```

GIT Branch Name

Adding the name of the current GIT branch is slightly more complex. The first step is creating a template file as `appl/words/git-info.tmpl` This file will be transformed into an assembly file with some search-replace actions during this copy.

```
; ( -- ) System
; R( -- )
; GIT Info
VE_GITINFO:
 .dw $ff08
 .db "git-info"
 .dw VE_HEAD
 .set VE_HEAD = VE_GITINFO
XT_GITINFO:
```

```
 .dw DO_COLON
PFA_GITINFO:
 .dw XT_DOSLITERAL
 .dw @BRLEN@
 .db "@BRNAME@"
 .dw XT_ITYPE
 .dw XT_EXIT
```

The next step is to add the file `words/git-info.asm` to the list of included files (e.g. `dict_appl.inc`). The final step is to add a rule to the build tool. In this example, ant is used, so edit the `build.xml` file in the project application directory as follows:

```
<!-- change existing rules -->
<target name="uno.hex"
  depends="git-info"
  description="Hexfiles for ...."/>


<!-- add to build.xml -->
 <macrodef name="git-branch">
     <attribute name="output" />
     <sequential>

         <exec executable="git" outputproperty="branch" >
             <arg value="rev-parse"/>
             <arg value="--abbrev-ref"/>
             <arg value="HEAD"/>
             <env key="LANG" value="C"/>
         </exec>
         <property name="@{output}" value="${branch}"/>
     </sequential>
 </macrodef>

<target name="git-info">
     <git-branch output="branch" />
     <length property="length" string="${branch}"/>
     <copy tofile="words/git-info.asm" file="words/git-info.tmpl" overwrite="true">
       <filterset>
         <filter token="BRLEN" value="${length}"/>
         <filter token="BRNAME" value="${branch}"/>
       </filterset>
     </copy>

 </target>
```

With these settings, a new command is available **`git-info`**. It prints the current branch name in the terminal:

```
> git-info
 master ok
>
```

Its easy to add this command to the **`applturnkey`** actions as well.

Conditional Interpret

It is often desirable to do actions conditionally. E.g. define a word if it's not there. For that, the words `[defined]` and `[undefined]` can be used. Amforth lacks an `[if]` to really make use of them. A real `[if]` is not that easy and a huge piece of code since it has to support nested `[if]` too. A way simpler solution is the following. It is restricted to the current SOURCE content, which is usually the current command line.

The basic idea is a conditional comment: `?\`. It takes a flag and works like `\` if the flag is true. if the flag is false, the remaining line is interpreted as if nothing has happened.

```
: ?\ ( f -- )
  if postpone \ then
; immediate
```

The use is straigt forward:

```
\ define foo unless it already exists
[undefined] foo ?\ : foo ." I'm foo " ;

\ call a word if defined
[defined] ver 0= ?\ ver
```

This recipe is based on a usenet posting of Bruce McFarling, 13.7.2014, on comp.lang.forth.

Coroutines

Coroutines are a computer science building block. From a users perspective they form a way to let code in different words communicate with each other. Thus coroutines can be seen as a simple way to multitask.

The key command is `co`:

```
: co r> r> swap >r >r ;
```

Producer/Consumer

A producer generates data which a consumer deals with. The example simply generates sequence of numbers which are printed to the terminal. The sequence ends when a value of 10 is reached.

```
: producer ( n -- n' n' ) begin 1+ dup co again ;
: consumer
  0 producer
  begin dup . 10 < while co repeat
  r> drop drop ;
```

The producer is quite simple. It is an endless loop that increases the TOS element, duplicates it and calls the partner. It creates a potentially endless stream of increasing numbers on the stack. For every new number, the other process (the consumer) is called via `co` to ... consume this number.

```
> consumer
 0 1 2 3 4 5 6 7 8 9 10 ok
>
```

The consumer has a little more to do. It is responsible to initially call the producer and to clean up after finishing.

Ceavats

Since there is dark stack magic in place, a construct like

```
: producer ( n -- n' n' ) begin 1+ dup co again ;
: consumer  begin dup . 10 < while co repeat ;
: runit 0 producer consumer r> drop drop ;
```

wont work. For such code, the `co` command needs to go deeper into the return stack.

For the same reason calls to CO inside DO-loops wont work. This is due to the loop parameters on the return stack.

Ctrl-C

To interrupt a running system at any time and reset it to the prompt a keyboard command ctrl-c is often used. AmForth can honour such a keystroke as well. To achieve it, a small code change needs to be applied and a new hex file pair has to be flashed to the controller.

The code change affects the interrupt usart handler (`drivers/usart-rx-isr.asm`). Here add the 4 lines 5-8:

```
  lds xh, USART_DATA
  ; optional: check for certain character(s) (e.g. CTRL-C)
  ; and trigger a soft interrupt instead of storing the
  ; charater into the input queue.
  cpi xh, 3
  brne usart_rx_store
  jmp 0
usart_rx_store:
  lds xl, usart_rx_in
```

With this change, whenever the keyboard sends the ascii code 3 (for ctrl-c) it is catched immediately and a soft reset is made. it requires that the WANT_ISR_RX option is set to 1.

Customize AmForth

Customization takes place when you create the hex files. It requires to edit files and re-generate them using the assembler.

All customization is done in the application master file. A good starting point is `template/template.asm`. If you change any other file, good luck. You can look for these options in the code however.

Application / Board specific

Every application is unique. Thus you need to create your own amforth specific to your intended environment. There is no generic image that works everywhere.

First make a copy of the `appl/template` directory (myapp in this example).

```
mt@ayla:~/amforth/appl$ cp -r template myapp
```

Next edit the `template.asm` in the mayapp directory. You may want to rename the file later. There are only a few lines that need your attention.

```
; include the amforth device definition file. These
; files include the *def.inc from atmel internally.
.include "device.asm"
```

This line is tricky. It uses the generated include file but does not specify the controller type itself. The magic is in the list of INCLUDE directory that is defined in the Makefile. Alternatively change the line to

```
.include "devices/atmega1280/device.asm"
```

please use the same directory name from the pd2amforth run above. The downside of using the controller-dependent directory name instead of some makefile variables is that you have to keep the definition of the controller type in sync in two files. The makefile always need the information for the programmer.

The next essential information is the frequency your controller uses. It is necessary (at least) to calculate the proper usart settings and to get the right delay in the forth word `ms`.

```
; amforth needs two essential parameters
; cpu clock in hertz, 1MHz is factory default
.equ F_CPU = 16000000
```

The last setting is the command terminal for the prompt. There are a few predefined settings. Unfortunately Atmel has changed the wording over time. In most cases make sure that the number in the _0 reflects the number in the RXEN0 definitions and the final 0 in the UCSZ00. Elder controllers do not have a number suffix, just delete it (atmega32 may serve as an example for it).

```
; initial baud rate of terminal
.include "drivers/usart_0.asm"
.equ BAUD = 9600
.equ USART_B_VALUE = (1<&lt;TXEN0) | (1<&lt;RXEN0) | (1<&lt;RXCIE0)
.equ USART_C_VALUE = (3<&lt;UCSZ00)
```

The next file to edit is the Makefile (or the `build.xml` if you want to use the ant utility). First set the right controller type:

```
# the MCU should be identical to the device
# setting in template.asm, it set
MCU=atmega1280
```

The last change is the placement of the `avrasm2.exe` and the `Appnotes2` directory.

```
# directories
DIR_ATMEL=../../Atmel
```

To flash the controller, the program **avrdude** is used. Depending on your programmer, define the BURNER variable as well:

```
# programmers / flags
USB=-c avr911  -P /dev/ttyUSB3
PP=-c stk200  -P /dev/parport0
JTAG=-c jtag2 -P /dev/ttyUSB2
BURNER=$(USB)
AVRDUDE=avrdude
AVRDUDE_FLAGS=-q $(BURNER) -p $(MCU)
```

All other settings can be kept for now. Just run make and look for errors.

WANT - Options

WANT Options are used to select certain features. There is always a default value in place (0).

The files `core/devices/$MCU/device.asm` contain among other things a complete list of WANT Options that can be used to include device specific Names into the dictionary.

```
.set WANT_AD_CONVERTER = 0
.set WANT_ANALOG_COMPARATOR = 0
.set WANT_BOOT_LOAD = 0
.set WANT_CPU = 0
....
```

Changing these options to 1 includes the matching sections from `device.inc` into the generated dictionary. The same effect could be achieved by selectively send the `device.frt` file sections.

Another such option is the WANT_IGNORECASE option. If it is set to 1, the amforth dictionary lookup routine is extended to handle upper and lower case words the same. This makes foo and FOO the same. This is a dictionary wide setting, valid for both pre-defined and self-defined words.

The 3rd group switches the USART terminal communication between interrupt and poll based routines:

```
.set WANT_ISR_TX = 0
.set WANT_ISR_RX = 1
```

Settings the value of 1 select the interrupt based routines, otherwise the poll driven routines are used. It is recommended to leave the options as they are set.

See also:

Redirect IO

Debug Shell

A debugger is a tool to check data at runtime. For amforth there is no single tool for that purpose. There are a *Tracer* and a *Profiler* available. They modify the code generation to achieve their goals. The debugshell presented here is called at explicit breakpoints to stop the execution of the current word and gives an independent command prompt to execute arbitrary commands.

This debugshell core can be modified and expanded in many ways. One example is the Watcher Utility for memory access.

Core

The debug shell core is quite small. Only 3 lines of code:

```
82 buffer: debugbuf
: (?) cr ." debug> " debugbuf dup 80 accept ;
: ?? begin (?) dup while (evaluate) repeat 2drop ;
```

Technically it is an isolated command shell activated at any time. With this debugger you can place the command `??` anywhere in your code and you'll get the `debug>` prompt whenever execution reaches it.

Extensions

The first extension is to have an on-off feature of the debugger. This can be achieved by an global flag or using deferred words:

```
0 value debug?
\ re-defines the ?? command and uses the old one
\ internally
: ?? debug? if ?? then ;
```

assigning a non-zero value to debug? (`true to debug?`) will activate the debug prompt. Note that the debug flag is stored in EEPROM und the settings survive a reset.

Another on-off implementation uses the deferred word technique.

```
Edefer breakpoint
' ?? is breakpoint
\ ' noop is breakpoint
```

Here you use the command `breakpoint` in your code instead of the basic `??` command.

```
: foo bar breakpoint baz ;
```

Note that the deferred vector is stored in EEPROM and the settings survive a reset.

The third extension uses interrupts. Since amforth executes them as ordinary forth code it is possible to assign any interrupt source to the `??` command (0 is an example interrupt number)

```
> ' ?? 0 int!
> 0 int-trap

debug> rp@ hex .
82D
debug>
 ok
>
```

When you use an external interrupt via a simple key you get the debug prompt whenever you press it. If you configure and enable the external interrupt of course. Note that in this case the debug prompt is executed in the interrupt mode of the controller, you have to use the polling implementation of the usart receive module.

Dump Utilities

Stack Dumps

Stack dumps can be generated with the command **.s**. The standard does not specify, how the output has to be formatted. There is an assembly version available intended for core development. This means that numbers are printed as unsigned (hex is highly recommended) and the TOS is on the left hand side. This makes it easy to get the most important information easily and the numbers are quickly found in memory dumps and the assembler LST and MAP files.

```
> -1 -2 -3 .s
  65533 65534 65535  ok
> hex .s
  FFFD FFFE FFFF  ok
>
```

Many other Forth's and the various books use another stack dump format. It uses signed numbers and places the TOS on the right side. This can be achieved with the following definition, kindly provided by Enoch on the mailing list:

```
: .s  ( -- ) \ stack picture listing order
  depth
  begin dup while dup pick . 1- repeat
  drop
;
```

The output looks like:

```
> -1 -2 -3 .s
 -1 -2 -3  ok
>
```

Other stack dumps are kindly provided by Erich:

```
\ variations on dot-s
\ dot-s, one way, signed output:
:  ds  sp@ sp0 1 cells - do i @  . -2 +loop ;

\ dot-s, one way, unsigned output:
: uds sp@ sp0 1 cells - do i @ u. -2 +loop ;

\ dot-s, the other way (reverse?), signed output:
: rs  sp@ sp0      swap do i @  .  2 +loop ;

\ dot-s, the other way, unsigned output:
: urs sp@ sp0      swap do i @ u.  2 +loop ;

\ dot-s, verbose, as it used to be in earlier versions of amforth:
:  dsv  depth dup 0 do i u. dup i -
    cells sp0 swap - dup u. @  . cr loop ;
: udsv  depth dup 0 do i u. dup i -
    cells sp0 swap - dup u. @ u. cr loop ;
```

Memory Dumps

Atmegas have three different memory address spaces. Each region has its own dump utility

dump Standard Memory. Every Address unit has 8 bits.

```
> $180 $20 dump

 0180 36 30 31 33 33 02 87 75 F4 6D 74 26 8F 63 A3 CD   601CD..u.mt&.c..
 0190 44 AB FC D7 3D DA D7 16 59 EB 3F AF 76 F2 27 3F   D...=...Y.?.v.'?
ok
```

edump EEPROM. Similar to RAM, every address unit has 8 bits, but since it used on a cell (16 bits) basis, the display uses this number width:

```
> 0 $30 edump

0000 - FFFF 0EA3 0121 0052 0CC7 3B65 0019 0B2B   ....!.R...e;..+.
0010 - 0014 0014 0E66 0001 0014 FFFF FFFF FFFF   ....f...........
0020 - FFFF FFFF FFFF FFFF 0000 0000 085F 080F   ............_...
 ok
```

idump Flash. Unlike the other memories, flash has 16 bits per address unit:

```
> $dc0 $20 idump

 0DC0 - 3830 0DC5 38D0 3837 002E 381A FF05 322E   08...878...8...2
 0DC8 - 6568 0078 0DAB 3800 3B23 02D5 02DD 02DD   hex....8#;......
 0DD0 - 02FF 0430 381A FF05 342E 6568 0078 0DC6   ..0..8...4hex...
 0DD8 - 3800 3B23 02D5 02DD 02DD 02DD 02DD 02FF   .8#;............
  ok
```

Exceptions

Exceptions are a way to commicate situations that cannot easily handled. An exception is a number. And only a number. The process to send an exception is called throw. The communication process follows the call stack upwardly. At any level it can be catched. Catching an exception means to handle it. It is possible to re-throw an unhandled exception. The standard amforth system has an outermost exception catcher. It handles all exceptions by printing their number and returning to the command prompt.

Exceptions are thread local. It is up to the user to catch all exceptions that may occure, since threads do not have an outermost exception catcher. An unhandled exception freezes the system.

The Forth standard specifies a number of exceptions already. Amforth provides a *Subset*

The general way to catch an exception is to call a word by it's execution token with `catch`. `catch` is much like execute except that it is capable to handle exceptions:

```
: foo -2883 throw ;
: bar ....
  ['] foo catch
  ?dup if ( -- e )
    \ ... handle exception or
    throw \ re-throw it, leaving bar
  then
  \ only executed if no exception occured or one got handled
  ...
;
```

User supplied exception codes should be in the range -65000 .. -4096. To garantuee uniquness, an exception number generator should be used. It can be as simple as

```
-4096 Evalue exception
: exception ( -- n ) exception dup 1- to exception ;
```

Every call to `exception` allocates a new exception number. It can be used as

```
exception constant !!foo
exception constant !!bar


... if !!foo throw then ...

... if !!bar throw then ...
```

Extended VM

At the Euroforth 2008 Stephen Pelc presented a paper http://www.complang.tuwien.ac.at/anton/euroforth/ef08/papers/pelc.pdf with some interesting extensions to the Forth virtual machine model. He proposed 4 new registers A, B, X, and Y. They can be used to simply store temporary data. More intelligent use cases arise from certian pointer operations with auto-increment and auto-decrement facilities.

AmForth adapts these ideas by combining the operations for A and X (B and Y similiarly). All commands are implemented in assembly using free registers and are included at compile time by adding the line

```
.include "words/reg-a.asm"
.include "words/reg-b.asm"
```

They do not depend on other files.

Basic Usage

Both registers A and B act the same way. They are not used inside any standard AmForth code and are not thread local. Since they use CPU registers, they work faster than variables or other memory based data.

To store data into a register, the command `>a` is used. Getting back the data is done with `a>`. Unlike the similiar looking `>r`, repeated calls to `>a` overwrite the register contents.

```
> a> .
  6183 ok
> 17 >a
 ok
> a> .
  17 ok
>
```

Pointer Voodoo

The registers can work as address registers. The command `a@` reads the RAM location, the A register points to. By using `a@+` the data is read and the register is incremented by 1 cell (2 bytes). Similiar the `a@-`: the data is read and the register is decremented by 1 cell.

```
> : dump swap >a 2/ 0 do a@+ . loop ;
 ok
>  source dump
 7320 756F 6372 2065 7564 706D  ok
>
```

To store data, the commands `a!`, `a!+` and `a!-` can be used. They store the Top-Of-Stack Element to RAM where the A register points to and modify it afterwards (if applicable).

The words `na@` and `na!` give access to the memory location n bytes relative to the current value of the A register. The content of the A register is not changed.

```
> : dump swap >a 2/ 0 do i cells na@ . loop ;
 ok
>  source dump
```

```
 7320 756F 6372 2065 7564 706D  ok
>
```

Portable Version

The registers are an extension of the underlying forth VM. There is no official reference implementation available. To experiment with them, the following code may be useful.

```
1 cells constant cell

variable reg:a

: >a  reg:a  ! ;
: a>  reg:a  @ ;
: a@  a> @ ;
: a!  a> ! ;
: na@ a> + @ ;
: na! a> + ! ;

\ post-increment fetch/store
: a@+ cell reg:a +! a@ ;
: a!+ cell reg:a +! a! ;
: a@- cell negate reg:a +! a@ ;
: a!- cell negate reg:a +! a! ;

\ alternativly
\ pre-increment fetch/store
: a@+ a@ cell reg:a +! ;
: a!+ a! cell reg:a +! ;
: a@- a@ cell negate reg:a +! ;
: a!- a! cell negate reg:a +! ;
```

Amforth has a highly optimizied assembler implementation of these commands.

Un-Doing Definitions

During development and testing it is often desirable to start over again and forget everything. Traditional forth's have the word **FORGET**. Amforth uses another, more modern approach: **marker**.

marker needs planning. Before use, include the *file:'dict_compiler2.inc* into your list of include packages to generate the hex files. Next upload the file `lib/ans94/core-ext/marker.frt`. If you encouter errors that the word `set-current` is not defined, you forgot to include the file `dict_compiler2.inc`.

Now the command **marker** creates a named snapshot of the current memory state to that you can return to any time afterwards. This includes all definitions and wordlists defined after the snapshot is taken. They get completely deleted and the occupied memories (flash, ram, eeprom) are available again.

```
> marker empty
 ok
> : foo ." foo" ;
 ok
> foo
foo ok
> empty
 ok
> foo
foo ?? -13 3
> empty
empty ?? -13 5
>
```

Note that the snapshot itself is gone as well. If you want it again, just re-create it.

Forward Declarations

Forward declarations are used to create recursive calls.

```
forward: foo
: bar foo ;
```

One solution for this task is *Deferred Words*.

```
Edefer foo
: bar foo ;
:noname ... ; is foo
```

They work usually fine. Furthermore they are based upon standard techniques.

Another solution for forward declarations uses a Just-In-Time (JIT) approach. With it a forward declaration resolves itself when called without further user (or programmer) interaction:

```
1 > forward: foo
2 > : bar foo ;
3 > bar
4  found only forward declaration.
5 > : foo ." hey" ;
6 > bar
7   hey
8 >
```

Line 1 declares foo to be defined later. This `foo` must not be called directly! The next line defines a word `bar` that uses foo. Note that `foo` is not yet a code definition. The word `bar` can be safely executed however. When the program execution of `bar` arrives at `foo`, the JIT module starts. This module first gets the name of the forwardly defined word (foo) and looks it up in the dictionary If `find-name` gets an XT for `foo` it is checked whether it is the XT of the `forward:` declaration or another one. If it is the XT of the `forward:` declaration, execution is aborted with an error message.

If an XT is found, that fulfils the requirements, two things happen: First the call to `foo` in the callee (bar) is changed from the original one (that goes to the forward declaration) to the new one that is found by `find-name`. Plus the XT is executed itself. As a result, a repeated call to `bar` will not call the JIT runtime checks again but hands over directly to the new foo.

`foo` can be redefined again. Any already resolved references will remain, still not resolved references will resolve to the new definition:

```
> forward: foo
> : bar foo ;
> : baz foo ;
> bar
  found only forward declaration.
> : foo ." I'm number 1" ;
> bar
  I'm number 1 ok
> : foo ." I'm number 2" ;
> baz
  I'm number 2 ok
> bar
  I'm number 1 ok
> baz
  I'm number 2 ok
>
```

The implementation uses internal data structure knowhow. The word `forward:` creates words that performs the above discussed runtime behaviour when called inside another definition. It is assumed that they are only called within a colon definition.

```
: forward:
 dp create ,
 does>
 dup 1- swap @i here iplace here count ( copy to temporary ram)
 find-name if \ unless some wordlist voodoo ...
   swap over = abort" found only forward declaration."
   dup r@ 1- !i execute
 else
   \ can only happen if search wordlist has been changed
   true abort" unresolved forward declaration"
 then
;
```

Late Binding

A similiar definition to `forward:` can be used to implement late binding. In this case a forward reference will not get permanently resolved but looks up the dictionary every time it get called.

```
: execute-late:
 dp create ,
 does>
 dup 1- swap @i here iplace here count ( copy to temporary ram)
 find-name if \ unless some wordlist voodoo...
   swap over = abort" found only forward declaration."
   execute
 else
   \ can only happen if search wordlist has changed
   true abort" unresolved forward declaration"
 then
;
```

This has a huge runtime penalty since on every invocation a dictionary lookup will be made. An option would be the use of `search-wordlist` command instead of `find-name` if a proper (short) word list exists.

```
> execute-late: foo
> : bar foo ;
> bar
  found only forward declaration.
> : foo ." I'm number 1" ;
> bar
  I'm number 1 ok
> : foo ." I'm number 2" ;
> bar
  I'm number 2 ok
>
```

Jump Tables

Author Erich Wälde

Summary: store precomputed values in a flash table / constructing a jump table

I wanted to store precomputed values in a permanent table. In one case the values were precomputed by evaluating a special declaration syntax. In the other case a list of **`:noname ... ;`** Definitions were going to be accessed through a (jump) table.

For the second problem I wrote down something like

> **Warning:** does not work, please continue to read for the solution!

```
create Table
  :noname  1 VarA +! ;  ,
  :noname  2 VarA +! ;  ,
  ...
```

This is not only naive, but also wrong: I'm mixing the compiled code with the XTs to be stored. So the table did contain the XTs in the wrong places mixed with the corresponding code. Once I understood this, I came up with the idea to generate the code and store the XTs in a RAM table first, and then copy the table from RAM to FLASH. Additionally, the table was initialised with **noop** as default value, since several entries remained *empty*, i.e. had nothing to do. I could have pushed the XTs on the stack, but with >50 entries this did not seem correct to me. Here we go:

First we define the length of the final table in *entries* and allocate the corresponding RAM space and proved a function to fill it with default values (**fill** would not help here, because **fill** copies bytes rather than cells):

```
variable SomeVar  \ variables needed by the code snippets should
variable OtherVar \ go BEFORE variable T.ram

#10 constant T.len
variable T.ram T.len cells allot
: T.init
  ['] noop
  T.len 0 do dup T.ram i cells +  ! loop
  drop
;
```

The RAM space can be *released* after producing the flash table, even though **T.ram** continues to exist as a word.

When compiling the **:noname** code snippets (think *anonymous functions*), we want to store the freshly generated XT at a given location in the ram table. A separate word makes the source code look nice (provisions against index overflow were added):

```
: >T.ram ( xt idx -- )
  dup 0 T.len within if
    cells T.ram + !
  else
    drop \ or throw
  then
;
```

To copy the content of **T.ram** to a new table in flash, the following function will do the work. In expects the number of items and the source address on the stack and consumes the next token of the source code as name for the new table.

```
: >ftable ( srcaddr len -- ) ( ccc.name )
  create  ( consumes ccc.name )
  ( len ) 0 do
    ( srcaddr ) dup  i cells +  @  ,
  loop
  ( srcaddr ) drop
  does>  \ fixme: needed???
;
```

Now we are equipped to compile the anonymous functions and store the XTs in **T.ram**:

```
T.init

:noname  #1 SomeVar +! ;        #3 >T.ram  \ function for field #3
:noname  #8 SomeVar +!
         #1 OtherVar ! ;        #4 >T.ram  \ function for field #4
```

Note that the *anonymous functions* can be of arbitrary length. The order, in which the fields in **T.ram** is filled, is irrelevant. It is not neccessary to fill all fields, since they all were initialized with the XT of **noop**.

After the table is prepared to our liking, we copy it to flash:

```
T.ram T.len >ftable T.flash
```

The new, permanent table is called **T.flash** in this example. We can now release T.ram with

```
T.ram to here
```

provided we did *not* define any other variables in the meantime. The XTs in **T.flash** can be called like this:

```
: T.run ( index -- )
  dup 0 T.len within if
    ( index ) T.flash +  @i  execute
  else
    drop \ or throw
  then
;
```

Port Code From C

There is a lot of C code out there. And there is no easy way to use it in AmForth. This recipe gives some hints for porting C code. A lot of more examples can be found at Rosetta Code.

Register Names and Bits

AmForth provides the same register names as C. All addresses are memory mapped. Many registers are split into bitgroups, that got names as well. In C these names are usually bitnumbers, AmForth uses the bitmaps as specified in the Atmel resource files.

Single bits are straight forward:

```
C:
  TIMSK0 |= (1<<OCIE0); /* set the bit */
  TIMSK0 &= ~(1<<OCIE0); /* clear the bit */
AmForth:
  \ set the bit
  : or! dup c@ rot or swap c! ;
  OCIE0 TIMSK0 or!

  \ clear the bit
  : and! dup c@ rot and swap c! ;
  OCIE0 invert TIMSK0 and!
```

Control Structures

The control structures are basically all the same. The differences are subtle and usually small. Conditional Execution

```
C:
  if(flag) { foo(); } else { bar(); }

AmForth:
  flag if foo else bar then
```

Counted Loops

```
C:
  for(i=0;i<10;i++) {
    foo();
  }
AmForth:
  10 0 do foo loop
```

If the loop increment is not 1, Forth uses the word `+loop` instead of `loop`:

```
C:
  for(i=0;i<10;i+2) {
    foo();
  }
AmForth:
  10 0 do foo 2 +loop
```

Profiler

Sometimes it is useful to watch a word working. The Tracer gives many informations, which may be confusing or un-usable at all. The number of calls of a given word can be more instructive. This is the time for the profiler utility.

```
variable profiling?
: profile:on -1 profiling? ! ;
: profile:off 0 profiling? ! ;

: profiler profiling? @ if 1 swap +! else drop then ;
\ re-define colon
: : :
  here 2 allot postpone literal postpone profiler
;

\ get the address of the profiling data.
: xt>prf ( xt -- addr )
 cell+ @i
;
```

After loading it into the controller, every colon word gets a counter (1 cell) which is incremented every time the word is called. Since this cell can be used like any variable, it can be reset any time as well.

```
> : foo 1 ;
 ok
> profiler:on
 ok
> ' foo xt>prf @ .
0 ok
> foo
 ok
> ' foo xt>prf @ .
1 ok
> 0 ' foo xt>prf !
ok
>
```

Quotations

Quotations are a programming technique to embed code inside of code. These embedded code snippets have an execution token but no name token.

Quotations use two new commands `[:` and `;]`:

```
: foo ... [: some words ;] execute ... ;
```

This code could be written as

```
:noname some words ; Constant #temp#
: foo ... #temp# execute ... ;
```

Quotations are not (yet) standardized by the forth2012 committee, but they seem to do so in the near future.

The amforth implementation has no dependencies and is used to implement some value-variants: *Double Cell RAM Value* and inside the *Serial Peripheral Interface SPI*

Efficient RAM Usage

RAM is probably the scarcest resource of an atmega. To make the best of it, some additional words may be helpful.

cvariable

cvariable acts like **variable** but does not allocate a cell (2 bytes) but only 1 byte of RAM. Access to it is limited to **c@** and **c!**. To indicate the size, one may want to use the Hungarian Notation.

There are a few possible implementations. One uses carnal knowledge of the inner workings, the other one relies on the fact that 1 cell is 2 bytes RAM in amforth.

```
: cvariable
   here constant 1 allot ; \ carnal knowledge

\ just a variable, but gives one byte RAM back to pool
\ : cvariable variable -1 allot ;
```

Use of such small variables is just like other ones:

```
answer cvariable \ allocates 1 byte only!
42 answer c!
answer c@ .

\ troublesome
answer @ .     \ undetermined
4242 answer ! \ destroys other data
```

See also:

Defining and using Arrays and the cvalue section in *Values*

Recognizer

The Forth text interpreter is able to work with numbers and command words. Its main purpose is to transform the text representation into a format closer to the system level and deal with them. Numbers are converted to their binary form for the data stack, command words are found in the dictionary and are further dealt with their execution tokens (and header flags).

In standard Forth there is no easy way to add new data types to the text interpreter and to associate actions with them for the different interpreter states. For example there are no native string literals. They are mimicked by using a command word (`s"`).

A recognizer fills this gap. It consists of two major parts: A word which does the parsing and converting. And a group of three methods for dealing with the data, the parsing word produces. These methods are used in interpret and compile state, and to postpone the data in colon definitions.

Amforth has recognizers for dealing with numbers and words from the dictionary built-in. To create and manage more recognizers, the words `get/set-recognizers` are used. They work similar to the `get/set-order` for word lists.

The word `recognizer:` takes three execution tokens and defines the method table. The word to parse the input stream takes a string as input and leaves either the method table `r:fail` (and no further data) or some data together with the method table defined with `recognizer:`. The interpreter takes care of the rest. It is possible to modify `>in` inside the parsing word if the data contains whitespace. Debugging such words can be tricky however.

String Literals

A string is delimited by two " symbols. The first one starts the string and the next one is the end of it. Everything in between is the string content. A string is denoted by its start address and its length. When compiling, the string needs to copied to the dictionary together with a runtime action.

Since a string can contain whitespace, the parsing word needs to deal with `>in`. The string address and length is valid for the lifetime of the SOURCE buffer only, a `refill` will change the content.

```
  ' noop
  ' sliteral
  :noname type -48 throw ;
recognizer: r:string

: rec:string ( addr len -- )
   over c@ [char] " <> if 2drop r:fail exit then
   negate 1+ >in +! drop \ expand parse area
   [char] " parse  \ get trailing delimiter
   -1 /string \ remove limiter
   r:string
;

' rec:string get-recognizers 1+ set-recognizers
```

The first line is simply the method table definition. The first two methods are already defined in amforth so nothing special here. The third method is called when the data is beeing postponed. For now, a string cannot be postponed, which would essentially lead to a string copy from the defining word to the new one. Instead an exception -48 is thrown.

The rec:string definition is more complex. The first line

```
over c@ [char] " <> if 2drop r:fail exit then
```

is the check whether the current word start with a " character. If it does not, the two arguments are dropped and the special method table `r:fail` is returned.

If the first character is a " the main task is to find the delimiting next ". Since the `>in` needs to be set to the location of this character as well, we use the word `parse` which does this work for us.

```
negate 1+ >in +! drop \ reset parse area to SOURCE
```

This line re-adjusts the parsing area to the beginning of the word inside SOURCE. The code

```
[char] " parse  \ get trailing delimiter
```

scans the whole input for the delimiting " and returns it. Finally some address cosmetics has to be done to include the very first character as well.

Finally the `r:string` method table is returned together with the string itself. The last command adds the string recognizer to the list of the recognizers the interpreter uses and activates it this way. Now we can enter strings as native data without the `s"` command.

```
> "foo" type
 foo ok
> " foo" type
  foo ok
>    " foo" type
 foo ok
>    "    foo" type
   foo ok
>    "    foo bar baz        " type
    foo bar baz         ok
> : test "  foo bar   " itype ;
 ok
> test
```

```
  foo bar    ok
>
```

Configuration Stacks

In Forth stacks are ubiquitous. Not only the data stack and the returnstack are used but many more can be found. Some of them hold configuration data like the search order stack which contains the wordlist-id's for the interpreter. Amforth got the recognizers as an additional core level stack. All these stacks are placed in the EEPROM storage and they have a few things in common:

- they are used at system level.
- they are seldom changed.
- they are used with an iterator.

EEPROM Layout

A stack is a contiguus eeprom space. The first cell has the actual stack depth, followed by the stack elements.

```
\ create a 11 elements stack
> edp constant a-stack 12 cells eallot
```

The constant `a-stack` is used to further work with the stack.

Commands

There are three basic stack commands:

- **`get-stack`** and **`set-stack`** transfer the whole stack content to/from the data stack. That makes it possible to change the stack with the standard stack commands. Note, that the top-of-stack contains the actual stack depth.
- **`map-stack`** The iterator calls a predefined word for every stack element and leaves the iteration if the action word tells to do so

get/set-stack

These commands transfer the data to/from the eeprom storage from/to the data stack. Only the actual stack depth is transferred.

map-stack

The **`map-stack`** command is the stack iterator. It calls an execution token for every stack element. The execution token is expeced to return a flag to decide whether the iteration continues or shall be ended prematurly. The command `map-stack` itself leaves a flag that informs about this termination cause. True means that a premature exit has been done, false means that the iteration was made for all elements.

The execution token is a nice example for *Quotations*. What it does is to use the stack element and generate a flag. If the flag is false (0), the data stack should be unchanged to make another iteration possible. If the flag is true (-1), the data stack can be changed to the final result.

The word called gets the actual stack element as the parameter. A flag is the return value. A true means, that this call was the last one, a false means, that the stack iteration continues with the next element.

A simple example is printing the word names of the recognizer stack. The EE_RECOGNIZERLISTLEN is a constant with the EEPROM address of the recognizer stack. The quotation extracts the name and prints it. The

false flag makes sure, that every stack member is called. Since the final result of the iteration is not relevant, it gets simply dropped.

```
: .recs
  [: ( XT -- false )
     >name icount $ff and itype space 0
  ;]
  EE_RECOGNIZERLISTLEN map-stack drop
;
```

A slightly more complex iterator is the dictionary lookup word. It has to use the addr/len information for each wordlist from the ORDER stack. That makes it necessary to keep this information inside the quotation.

```
: find-name ( addr len -- xt +/-1 | 0)
   [: ( addr len wid -- xt +/-1 -1 | addr len 0 )
      >r 2dup r>
      search-wordlist
      dup 0<> if >r nip nip r> -1 then
   ;]
   EE_ORDERLISTLEN  map-stack
   0= if 2drop 0 then
;
```

Since the quotation already deletes the addr/len from the data stack if the word is found, this cleanup is only necessary if no word could be found at all.

A similiar example is used for the recognizer stack. The main difference is the other meaning of the stack element and another iteration abort condition.

```
: do-recognizer ( addr len -- i*x r:table|r:fail )
  [: ( addr len rec:XT -- i*x r:table -1 | addr len 0 )
     rot rot 2dup 2>r rot
     execute
     2r> rot dup r:fail =
     if drop 0 else nip nip -1 then
  ;]
  EE_RECOGNIZERLISTLEN map-stack ( -- i*x addr len r:table f )
  0= if \ no recognizer did the job, cleanup and add r:fail as default result
   2drop r:fail
  then ;
```

Testing

For quite some time it is a good practice to write test cases for software for and during the development. With them a developer can be sure that the words do what they are supposed to do. Forth has a long tradition in this area starting with the ANSI standard from 1994. John Hayes wrote a tester and defined a test case synatx which got into widespead use since then.

Amforth has adapted its code with the file `lib/ans94/tester-amforth.frt`. The changes from the original are rather minor: Turn all keywords into lowercase.

Prepare for Tests

The tester requires only `marker` which is defined in file:*lib/ans94/core/marker.frt*. There are no further dependencies.

Using Test Cases

The tester uses 4 words:

`TESTING` add your comment here is a "talking comment" to make the output somehow look nice.

t{ starts a new test. Prepare the stack and call your function, then

-> indicates that the test code is complete. Add the remaining stack after this word.

}t completes the test by comparing the stack with the expected stack. If everything is well, the ok prompt will appear.

A test summary is not printed, but that could

Write a file with your new library function, e.g.

```
\ function.frt
\ define some new function
: plus  + ;
```

Then write the test cases, e.g.

```
\ function-test.frt

\ load the tester from lib/ans94/tester
#include tester-amforth.frt

\ load the code under test
#include function.frt

\ run the tests
TESTING the tester ----------------------------------------

t{ 1 1 +    -> 2 }t
t{ 1 1 plus -> 2 }t
t{ 1 1 plus -> 3 }t \ incorrect
t{ 1 2 plus -> 3 }t \ tester contiues
t{ $FFFF 1 plus -> 0 }t
t{ 1 2 3 4 plus -> 1 2 7 }t
```

Now load the file `function-test.frt` to the controller and watch the show.

```
TESTING the tester ----------------------------------------
 ok
> t{ 1 1 +    -> 2 }t
 ok
> t{ 1 1 plus -> 2 }t
 ok
> t{ 1 1 plus -> 3 }t
INCORRECT RESULT: t{ 1 1 plus -> 3 }t
 ok
> t{ 1 2 plus -> 3 }t
 ok
> t{ $FFFF 1 plus -> 0 }t
 ok
```

With the command `-ans-tester` everythings gets unloaded and is ready for the next run.

Acknowlegment

This recipe is based upon an email from Erich Wälde on the amforth-devel mailing list.

Tracer

Sometimes it is useful to watch a word working. A simple trace utility that prints the name of the word and the stack content at the beginning helps to get important information.

```
\ flag to dynamically turn trace output
\ on and off
variable tracing?
: trace:on -1 tracing? ! ;
: trace:off 0 tracing? ! ;
: tracer tracing? @ if cr itype cr .s else drop drop then ;

\ save the name of the word for use in tracer
: : >in @ >r : r> >in !
   parse-name postpone sliteral postpone tracer
;
```

After loading these few lines into the controller, every word being defined afterwards prints it's name and the stack content at runtime.

```
> : foo 1 ;
 ok
> : bar 2 foo ;
  ok
> : baz 3 bar ;
 ok
> trace:on
 ok
> baz

baz

bar
0 2221 3

foo
0 2219 2
1 2221 3
 ok
> .s
0 2217 1
1 2219 2
2 2221 3
 ok
> trace:off
 ok
> baz
 ok
>
```

It requires amforth version 4.7 and up. (sliteral is missing in earlier versions).

This tracer is based on posts from Emma Ledwidge and Gerry in the usenet group comp.lang.forth in January 2012.

Upgrade AmForth

You may want to upgrade AmForth if you encounter a bug that is fixed in a later revision or want to make use of a certain new feature. In this recipe I assume that you use the standard filesystem layout.

The first step is to unpack the new release archive into a new directory. Do not try to overwrite an existing installation. The 2nd step is a full copy of the `Atmel/` directory from your existing installation into the new tree. This copy has to include the `Appnotes*/` directories and the `avrasm32.exe` file from Atmel. These files are verbatim copies from an Atmel AVR Studio installation and are not included into the AmForth distribution (guess why).

The next step is to make sure, that the template sample application can be compiled without problems. If you encounter any error, fix it first. If everything went well, you can copy your application directory from the old

tree into the new directory tree and carefully re-apply all changes that the template application has got since you started your own application. The major source for information is the change log on the AmForth Webpage and the Source Code Repository.

Unbreakable AmForth

This recipe gives some hints how to protect AmForth from being (partially) destroyed and to be able to recover from accidents without re-flashing the system.

Flash protection

The first line should be a flash protection. It prevents the **!i** to write to places where it should not. This can be done by creating a new word, that does some bounds checking and does the final write command only if everything is ok.

```
\ write protect everything up to this command
: save-!i [ dp 12 + ] literal over <
  if (!i-nrww) else -20 throw then ;
' save-!i is !i
```

After these few lines, all flash up to this definition is now write-protected. All forbidden access will generate an exception. The offset added makes sure that our new command protects itself as well.

The code in the NRWW section (file:*dict_appl_core.inc*) is already write protected, the controller itself makes sure of that. A write attempt to this locations does not generate an exception, it will be ignored silently.

EEPROM protection

Protect the EEPROM is more difficult. AmForth rewrites a few cells during normal development, which makes a simple write protection as described for the flash rather useless. Furthermore AmForth uses the EEPROM content at very early stages in the boot process. Any safety action needs thus be hard-coded in **warm** and it will need a trigger to start the EEPROM recovery. This could be a check for some data or a hardware based information.

As long as the command prompt works, the data that got saved by a **marker** definition is sufficient to reset to a working system.

Values

The standard VALUE gives access to memory content like a variable does. The difference between these two is that a value gives a actual data whereas a variable leaves the address of the data on the stack. The place, where a value stores the data is usually not known. There is only one way to change it: use of **TO**.

```
> 42 Evalue answer
 ok
> answer .
 42 ok
> 4711 to answer
  ok
> answer .
  4711
>
```

This resembles the intended usage pattern for EEPROM: Write seldom, read often.

The forth standard defines a few value types: **2VALUE** for double cell data, **FVALUE** for floating point numbers and the single cell sized **VALUE** itself. They all use the same **TO** command to change their content. This requires a non-trivial implementation to achieve it. Amforth uses a simple data structure for each value in the dictionary (flash), almost identical to the one used by **defer**. The first element contains the address of the actual data. This first field is followed by 2 execution tokens (XT) for the read and write operations. This makes the runtime

operations fairly easy. The read operation (the 2nd element in the data structure) is called with the address of the 1st element. It is expected that the read operation leaves the data on the data stack. Similiar the write operation. The **TO** command simply executes the write execution token (the 3rd element). The similarities between values and defers goes as far as **to** and **is** are in fact identical and can be used with both.

This generic approach allows not only single cell data in EEPROM but any data everwhere. The following examples illustrate this with an implementation of a value that stores a single byte in RAM and a cached version of the standard EEPROM value. They have in common that calling their names give the data and applying **TO** to them stores new data.

cvalue

Cvalues store a single byte in RAM. The first element in the value data structure in the dictionary is the address of the RAM byte. The defining word allocates it. Like any other RAM based data its content is not preserved over resets and restarts.

```
\ two helper functions, not called directly
: c@v @i c@ ;
: c!v @i c! ;

: cvalue ( n "name" -- )
  (value)            \ create a new wordlist entry
  here ,             \ the address of the RAM memory
  ['] c@v ,          \ method for the read operation
  ['] c!v ,          \ method for the write (TO) operation
  here c!            \ initialize the RAM content
  1 allot            \ formally allocate the RAM byte
;
```

Using this new value is straight forward:

```
> 42 cvalue answer
ok
> answer .
42 ok
> 17 to answer
ok
> answer .
17 ok
>
```

After its definition the new size restricted value is used like any other value. To read it, simply call its name. To write to it, use the TO command. As a bonus, all operations are save against overflows:

```
> $dead to answer
ok
> hex answer .
AD ok
>
```

cached Value

A cached value is a value that stores the data in EEPROM but tolerates heavy write access by using a RAM cell as a cache. This RAM cell gets all write operations. The eeprom is not written until an explicit flush is performed. At startup the cache needs to be warmed, this is not done automatically.

```
\ 2 is a magic number
: @cache 2 + @i @ ;
: !cache 2 + @i ! ;

\ cache related words
```

```
 : flush-cache 1+ dup 2 + @i @ swap @i !e ;
 : warm-cache  1+ dup @i @e swap 2 + @i ! ;

 : cache-value
  (value)                          \ create the vocabulary entry
  dup ehere dup , dup cell+ to ehere !e \ allocate an EEPROM cell.
  ['] @cache ,                     \ XT for the read method
  ['] !cache ,                     \ XT for the write methon
  here 2 ( 1 cell ) allot dup , !   \ allocate a RAM cell and initialize it
;
```

The following example session creates a cached value and demonstrates the content of the two memory's during normal execution.

```
> ehere \ keep the eeprom address for later direct access
 ok
> 42 cache-value c-dp
 ok
> 17 to c-dp
 ok
> c-dp . dup @e .
\ RAM and EEPROM contents are different!
 17 42 ok
> ' c-dp flush-cache
 ok
> c-dp . dup @e .
 17 17 ok
>
```

Note that there is a difference in programming style between the load/store and the addiional warm/flush operations. The latter use a code sequence like

```
' value method
```

instead of the standard `TO` schema

```
method value
```

Its fairly simple to achieve the `TO` schema for the other commands as well, but since this requires a parsing word (which is state smart too) the forth gurus consider this suboptimal. A second argument against may be the growing acceptance of the OO notation `object method` with object beeing kind of an address.

```
 : flush
  ' state @ if
    postpone literal postpone flush-cache
  else
    flush-cache
  then
; immediate
```

Double Cell RAM Value

A very compact implementation (a single short word) makes use of *Quotations*:

```
\ a value in RAM with 2 cells data storage
\ requires quotations and 2@/2! from double wordset

: 2rvalue ( d -- )
  (value)
  here ,
  [: @i 2@ ;] ,
  [: @i 2! ;] ,
```

```
  here 2! 4 allot
;
```

This value stores a double cell information in RAM. The read and write methods are embedded as quotations.

See also:

I2C EEPROM VALUE Quotations

Walking Wordlists

Wordlists are the building block of the dictionary. A wordlist is a single linked list of entries. Entries are compiled colon words, assembly words or data structures created with create. The link chain ends when the next pointer is zero. A wordlist grows usually upward in the flash memory, while the links point downwards.

The anchor of a wordlist is the stored in an EEPROM cell, which address is the wordlist identifier.

Walking a wordlist requires the following steps

1. get the WID (e.g. environment)
2. read the starting address from the EEPROM (line 2) It the name field address of the first word.
3. start the loop until zero is reached (lines 4+5)
4. keep the vital iterator data (line 6)
5. do some work with the entry, consuming the NFA-copy from the previous line (line 7)
6. go to the next entry (line 8)
7. repeat the loop body

The implementation of the word **show-wordlist** may illustrate this:

```
1  : show-wordlist ( wid -- )
2    @e
3    begin
4      ?dup
5    while
6      dup
7      icount $ff and itype space
8      nfa>lfa @i
9    repeat
10  ;
```

The sequence *$ff and* masks the entry flags (e.g. immediate) and extracts the actual string length for use with the following **itype**.

Way easier is using the `traverse-wordlist` available since amforth version 5.2. With it, the above changes to

```
\ print the name of a single wordlist entry
: show-word ( nt -- flag )
    name>string itype space
    true \ see spec of traverse-wordlist

: show-wordlist ( wid -- )
    ['] show-word swap traverse-wordlist
;
```

Watcher

A Watcher is a tool that monitors the access to a memory region. If a predefined memory location is accessed (read, written to or both) something is done in addition. In its simplest case, a message is printed.

The next few code lines use a single watch address. Any access to it is trapped and calls the Debug Shell.

```
\ core routines
variable watch-addr
defer watch-action
\ redefine memory access words
: ! dup watch-addr @ = if watch-action then ! ;
: c@ dup watch-addr @ = if watch-action then c@ ;
: c! dup watch-addr @ = if watch-action then c! ;
\ this one is the last one
: @ dup watch-addr @ = if watch-action then @ ;
\ simply use the debugshell
' ?? is watch-action

\ possible modifications
\  use an address range
\  use a list of addresses (address ranges)
```

After loading these lines, any word that uses memory access words will be watched for access to a particular address. If it is accessed, the debug shell will come up for further work.

Hardware Modules (AVR)

Dallas 1-Wire Devices

Dallas 1-Wire devices use 1 wire (besides ground level) to connect a peripheral device with the hostmaster. A common use case are the temperature sensors DS18[S|B]20. The communication protocol between the device and the micro controller is simple but at some points very timing sensible.

The typical wiring is shown in the picture. The pull up resistor is recommended as well as the connection to VCC.

This recipe is based upon work from Brad Rodriguez for the 4€4th project. He split the 1-wire module into two parts: a bit level layer for all the dirty, time critical work with only 2 small assembly words, and all other stuff in portable forth code. Despite the fact, that he uses another controller type, the forth code remained almost the same.

To use the 1-wire module new AmForth hexfiles have to be created with the file `drivers/1wire.asm` included into your project master file (e.g. `template.asm`) All configuration is done with 2 constants that are set in the same file. They define, which pin is connected to the 1-wire bus. There are no defaults

```
; Port and Pin for the 1-wire bus.
.equ OW_BIT=4
.equ OW_PORT=PORTE

.include "drivers/1wire.asm"
```

After burning the new system into the controller, two new words are available: **`1w.reset`** and **`1w.slot`**. The **`1w.reset`** reinitializes the 1-wire bus and gives a flag, whether at least one device is present or not. It would not make much sense to continue, if no device is recognized.

```
: 1wirejob ... 1w.reset if
    do-the-job
  then ... ;
```

The **`1w.slot`** writes the LSB to the 1-wire bus and reads one bit back, if a 1 was written. It turns off all interrupts for approx 60 microseconds to achieve the correct timing. The lower byte of the TOS is rotated so repeated calls to **`1w.slot`** can transfer all bits of a bytes without further code. It is probably the smartest word of the whole package.

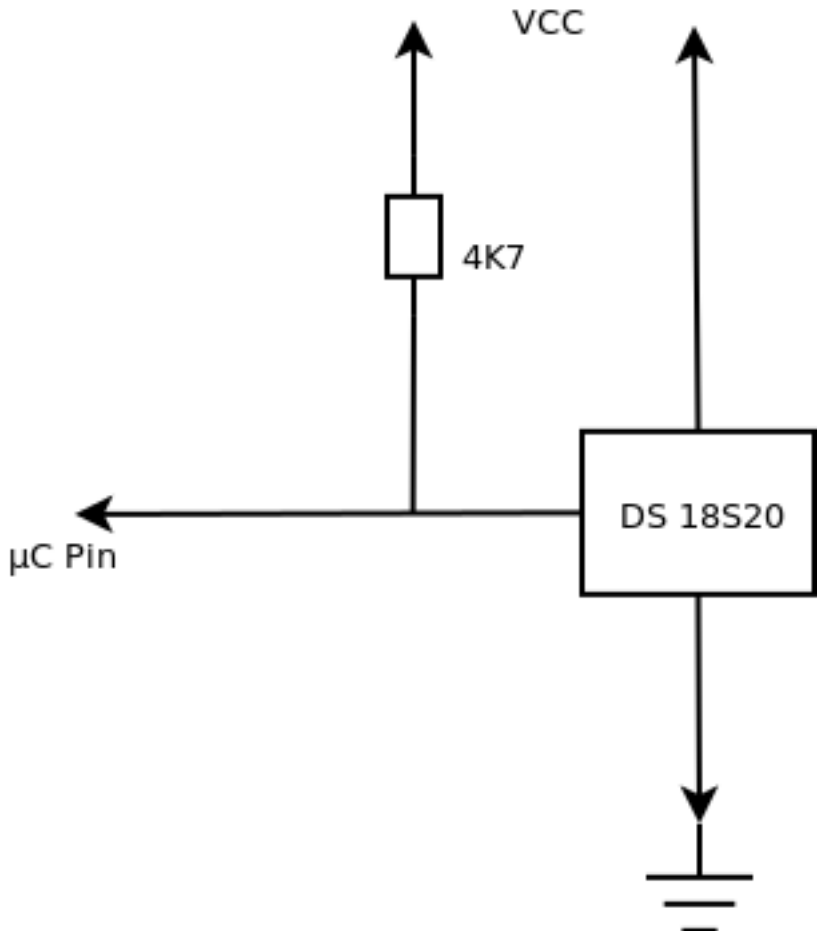


```
: 1w.touch ( c1 -- c2 )
    1w.slot 1w.slot 1w.slot 1w.slot
    1w.slot 1w.slot 1w.slot 1w.slot ;

: 1w.put ( c -- ) 1w.touch drop ;
: 1w.get ( -- c ) $ff 1w.touch ;
```

1-Wire Tools

The first useful tool is the low level **`1w.reset`**. It checks whether at least one 1-wire device is present and working or not. Other useful tools are in the file `1wire.frt`. They perform a ROM search to print all ROM id's of the connected devices.

```
(ATmega1280)> hex 1w.showids

 10 11 E5 68  2  8  0 2A
 28 4C 75 CC  2  0  0 CD
ok
(ATmega1280)>
```

Code specialized for temperature sensors is in the file `1wire-temp.frt`. Keep in mind, that at least 2 different sensor types are available with different result encoding's. The code is not currently capable to take care of the differences.

```
> hex create sensor2 28 , 4C , 75 , CC , 2 , 0 , 0 , CD ,
ok
> decimal sensor2 1w.convert 750 ms sensor2 readtemp temp>pad pad count type
```

```
18.0 ok
>
```

Possible Improvements

The module opens the door to the 1-wire world. It is by far not complete or finished. Some things could (or should?) be done better. Feel free to improve them and share them, please.

Command IO

The standard command IO uses interrupt driven receive and polled send. The receive interrupt fills an 16 byte long ring buffer. The **KEY** and **KEY?** words are vectored to code that checks this buffer and acts accordingly.

```
: isr data-port c@ >rx-buf ;
```

The **KEY** and **KEY?** words can check whether there are unread characters in the buffer and act accordingly.

Digital Ports

Atmegas have digital ports each with 8 individual pins. They that can be configured as input and output pins. To make an easy use of them, amforth has a small library `bitnames.frt` in the `lib` directory.

The name port indicate that only IO ports can be used with this library. Since the addresses used are RAM addresses, the whole address can be used, not only the IO range. The addresses are accessed on byte level. For single bits (portpin: definitions) the bitnumber can exceed the 8 bits a byte can hold. In this case the address is increased to a value that contains the bit specified: e.g. bit 24 of address 80 is the same as bit 0 of address 83. Bitmaps are bound to the byte they address.

```
PORTB 1 portpin: led
```

Output pins

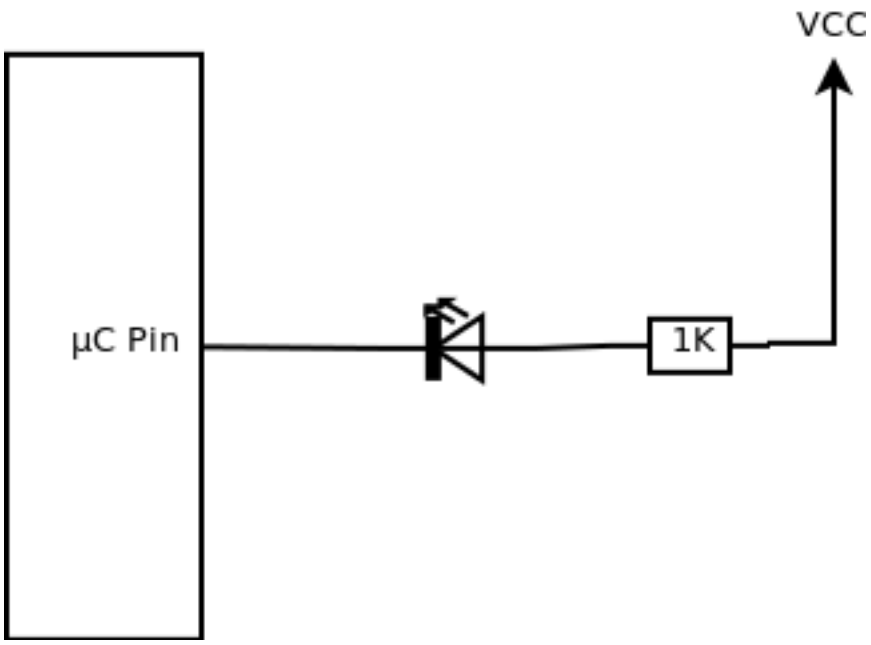

The simplest hardware is a LED connected to one pin. The following sequence initializes the pin and turns the LED on:

```
> PORTB 1 portpin: led
 ok
> led is_output
 ok
> led low
```

To turn it off, simply execute

```
> led high
```

Input pins

Input pins are used to get the voltage state: High or Low. A simple hardware would be as follows:

```
             VCC
               ^
               |
              +-+
              | |
              | |
              +-+
  |            |
0 +-----------+
  |            |
               \
Port            \
               + \>
               |
               |
             ----
              GND
```

The resistor is not really needed, the pin can be configured to use an internal resistor.

```
>  PORTB 0 portpin: mykey
 ok
>  mykey is_input
 ok
>  mykey pin_pullup_on
```

If the key is not pressed, the resistor (either the internal pull up or the external resistor) drives the voltage to high. If you read the pin, you will get a 1 in this example:

```
> mykey pin@ .
1 ok
```

if the key gets pressed, it will connect the controller pin with ground level, giving a 0

```
> mykey pin@ .
0 ok
```

Bit Pattern

The library can deal with bit patterns as well.

```
+-----+-----+-----+-----+-----+-----+-----+-----+
|  0  |  0  |  0  |  0  |  1  |  1  |  1  |  1  |
+-----+-----+-----+-----+-----+-----+-----+-----+
```

```
> addr $0f bitmask: addr-low
> %01000000 addr c! \ set all bits at addr
```

```
> $ff addr-low pin! \ set only a few bits
> $03 addr-low pin!
```

The pin! command changes the bits to the value given only for those bits which are set to 1 in the bitmask. In this example, only the lower 4 bits are changed, the upper ones are left unchanged:

```
+-----+-----+-----+-----+-----+-----+-----+-----+
|  0  |  1  |  0  |  0  |  1  |  1  |  1  |  1  |
+-----+-----+-----+-----+-----+-----+-----+-----+

+-----+-----+-----+-----+-----+-----+-----+-----+
|  0  |  1  |  0  |  0  |  0  |  0  |  1  |  1  |
+-----+-----+-----+-----+-----+-----+-----+-----+
```

The same masking policy applies to pin@. Internally the portpin definition is converted into a bitmask. The words `high` and `low` which set resp. clear the bitpositions are optimized versions of pin!:

```
: high $ff rot rot pin! ;
: low $00 rot rot pin! ;
```

Note: The extended bit range for single bits are available in amforth 5.3 or later. The file bitnames.frt works with older version too.

EEPROM

This recipe is about the internal EEPROM storage of the atmega's. It does not deal with external devices such as I2C or SPI EEPROM chips.

The EEPROM contains usually 512 to 2048 bytes, depending on the actual controller type. The address range goes from zero (0) upwards and is independent of the other memory regions flash and RAM. The address unit is the byte, just like RAM. There is no alignment involved.

The usage pattern of the EEPROM is *write seldom read often*. which is slightly different from flash (write almost never, read very often) and RAM (read and write very often). Any data written to EEPROM is kept over reset and power off.

built in's

The basic words to access EEPROM are `@e` and `!e`. They operate with the standard 2 bytes forth cells to read and write data. There is no byte-level access.

```
2 @e u.
64 82 !e
```

Amforth uses EEPROM internally already. To keep track of the free memory area the command `ehere` gives the first free EEPROM address.

```
> ehere u.
 82 ok
>
```

The following commands manage EEPROM space: `Edefer` and `Evalue`. `Evalue` is works according to the ANS94 standard word `value`.

```
> 1 Evalue one
 ok
> one u.
 1 ok
> 17 to one
 ok
> one u.
```

```
  17 ok
>
```

The `Edefer` word defines a word that, when called executes another word by its execution token. Amforth uses this technique to implement the `turnkey` action.

your own stuff

To use EEPROM storage without `Evalue` or `Edefer`, the command `ehere` is the building block. It is the pointer to the first unused byte in the EEPROM. It is itself a `Evalue` that can be adjusted with `to` to allocate (or free) address space.

```
> : Eallot ehere + to ehere ;
 ok
> ehere u. 17 Eallot ehere u.
 84 101 ok
> 84 constant my-eeprom
 ok
> my-eeprom u.
 84 ok
 >
```

Adjusting `ehere` as described above is consistent with later use of `Evalue` and `Edefer`.

Arrays

Arrays can be placed in EEPROM as well

```
>  : Ebuffer: ehere constant Eallot ; ( n -- ) ( similar to buffer: from forth200x)
 ok
>  42 Ebuffer: my-array
 ok
>  : my-array-@ cells my-array + @e ;
 ok
>  : my-array-! cells my-array + !e ;
 ok
>
```

The recipes *Defining and using Arrays* and *Values* may give further ideas.

Note: Evalue was called simply value in revisions earlier than 5.3. Eallot was Ealloc and did leave the start address of the allocated memory region.

Efficient Bit Manipulation

Idea and Implementation: Enoch

Some Atmegas have a number of General Purpose IO Registers. They are not connected to any hardware but can be used with special instructions. They are executed in one CPU cycle and have the additional advantage to be interrupt safe.

This solution differs from the bitnames approach in that it does not operate on addresses but creates new commands that do so.

```
PORTA 0 port:hi! relay_on
PORTA 0 port:lo! relay_off
```

A bitname solution would look like

```
PORTA 0 portpin: relay
: relay_on relay high ;
: relay_off relay low ;
```

The implementation of the first solution generates highly optimized machine code. The bitname solution is more generic but significantly slower and is not interrupt safe.

```
: port:hi ( portadr bitno -- )      \ SBI
   swap $20 - 3 lshift or $9A00 or code , end-code
;

: port:lo ( portadr bitno -- )      \ CBI
   swap $20 - 3 lshift or $9800 or code , end-code
;
```

Additionally some range checks should be applied to make sure that the instruction does actually work as it should be

```
: _bitio
   dup $1F U> if &-9 throw then
   over $7 U> if &-9 throw then
;

: port:hi ( portadr bitno -- )      \ SBI
   swap $20 - _bitio
   3 lshift or $9A00 or
   code , end-code
;

: port:lo ( portadr bitno -- )      \ CBI
   swap $20 - _bitio
   3 lshift or $9800 or
   code , end-code
;
```

I2C EEPROM Blocks

Stores Blocks in I2C serial EEPROM attached to TWI.

Code

A quick start with the amforth-shell is as follows

```
(ATmega16)> #include i2c-eeprom-block.frt
.... lots of files included, approx 1,5kB dictionary space
... for testing and inspekting
(ATmega16)> #include list-dump.frt \ from lib/ans94/block
... loading code and dependencies
 ok
```

Configuration

The I2C hardware drivers need two initialization steps. The first is the I2C/TWI hardware init (`i2c.init` or simply `i2c.init.default`) and the device init as `i2c.ee.blockinit`. After these two commands, which need to run before use in e.g. turnkey, the I2C memory modules can be accessed.

```
> i2c.init.default  \ initialize TWI hardware module in slow speed
> 24c64 $50 i2c.ee.blockinit \ set up for block level access
```

Place these two commands (or similar ones) in the application turnkey word. The parameters to the `i2c.ee.blockinit` are the page-size (there are some convenient constants, see below) and the I2C hardware id ($50). All subsequent access to the device depend on these information. They can be changed any time.

More Information is in the recipe *Blocks*.

The specs of almost every serial EEPROM mention, that after a write action, 5 milliseconds have to pass before the next access can be made. The library takes care of this for every page written. It splits the the data transfer of the (possibly) larger buffer size to the actual page size of the controller too. To configure the page sizes, the command `i2c.ee.setpagesize` has to be used. It takes the page size in bytes as the parameter. To make the source code more readably, constant names like `24c64` are provided.

Device Type	Size	Page Size
24c08	1KB	16
24c16	2KB	16
24c32	4KB	32
24c64	8KB	32
24c128	16KB	64
24c256	32KB	64
24c512	64KB	128
24c1024	128KB	256

The code assumes 2-byte addresses inside the memory and a single I2C hardware address (0x50). Modules which use multiple I2C addresses work within the limits of a single address.

See also:

Two Wire Interface TWI/I2C I2C EEPROM VALUE

I2C Bus Scanner

The word `i2c.detect` from file `i2c-detect.frt` provides a nicely formatted overview of all connected I2C devices.

```
(ATmega1280)> i2c.init.default
  ok
(ATmega1280)> i2c.detect
       0  1  2  3  4  5  6  7  8  9  A  B  C  D  E  F
  0:                       -- -- -- -- -- -- -- -- --
 10:  -- -- -- -- -- -- -- -- -- -- -- -- -- -- -- --
 20:  -- -- -- -- -- -- -- 27 -- -- -- -- -- -- -- --
 30:  -- -- -- -- -- -- -- -- -- -- -- -- -- -- -- --
 40:  -- -- -- -- -- -- -- -- -- -- -- -- -- -- -- --
 50:  50 51 -- -- -- -- -- -- -- -- -- -- -- -- -- --
 60:  -- -- -- -- -- -- -- -- -- -- -- -- -- -- -- --
 70:  -- -- -- -- -- -- -- --
  ok
(ATmega1280)>
```

In this example, two devices are connected: a port expander (PCF 8574) and two EEPROMs (a 24c64 and a ST 4128 BWP).

The missing addresses are excluded since they are not valid I2C 7-bit device addresses. They are not probed as well.

A similar command exists on Linux platforms.

See also:

Two Wire Interface TWI/I2C, *I2C Generic*

I2C EEPROM

I2C EEPROMs are attached to the I2C bus (TWI). They provide usually a few KB of storage which can be reprogrammed quite often (millions of write cycles). Some chips can be reprogrammed withouts limits (FRAM's).

Every I2C module has one (or more) hardware identifier(s). This address is needed to select one chip of possibly many on the bus.The default for EEPROMs is $50. If a chip is selected, the actual memory address and the data are transferred. The current I2C library works with chips that use a 2 byte address. Consult the datasheet, if in doubt. EEPROMs with only one I2C address (`i2c.detect`) and at least 8 Kbit (1 KByte) should work.

Special care must be taken when data is written across the EEPROM internal page boundaries. Most EEPROM will wrap around the read and write operation to the beginning of the current EEPROM page. For this library only the block access words know about eeprom pages.

Source Code

The source code for the EEPROM is in the file `lib/hardware/i2c-eeprom.frt`. It depends on `lib/hardware/i2c.frt`. It is recommended to use the amforth-shell to upload the file since it automatically resolves all dependencies.

```
(ATmega16)> #include i2c-eeprom.frt
.... lots of files included
 ok
(ATmega16)>
```

Runtime

Using the eeprom requires the setup of the TWI module of the controller.

```
(ATmega16)> i2c.init.default  \ initialize TWI hardware module in slow speed
 ok
(ATmega16)>
```

When the I2C system works (check with `i2c.detect` from *I2C Bus Scanner*) everything is ready to store data. A more convenient method to handle more data is what the *I2C EEPROM Blocks* provide.

Access

There are words for 1 byte data and cell sized (2 bytes) data. They need two address information: the hardware id (usually $50) and the address within the selected device.

`c@i2c.ee` (addr hwid - c) Fetch a byte from addr using the I2C module identified with hwid

`c!i2c.ee` (c addr hwid –) Store a byte at addr using the I2C module identified with hwid

`@i2c.ee` (addr hwid - n) fetch a cell from addr using the I2C module identified with hwid

`!i2c.ee` (n addr hwid –) Store a cell at addr using the I2C module identified with hwid

> **Warning:** Note that the write operations *do not* wait. Most (but not all) I2C memory modules require a 5 millisecond delay after a write before the next access can be made.

See also:

I2C EEPROM Blocks and *I2C EEPROM VALUE*

I2C Generic

The basic low-level words provide a rather raw access to the I2C bus and its devices. Since the bus has some standard actions, which are always the same, some combinations are useful factors.

`i2c.begin` **(addr –)** start a I2C communication with the device addr. This involves sending the start condition and the address with the write bit cleared.

In addition, the variable i2c.current gets the addr information to be available for user applications.

`i2c.begin-read` **(addr –)** start a I2C *read* communication with the device at addr. This means that the device address is used with the read bit *set*.

`i2c.end` **(–)** The communication ends with sending the I2C stop condition and the bus is released. The variable `i2c.current` is cleared.

With these commands an I2C transaction becomes

```
i2c.hw.id i2c.begin .... i2c.end
```

Inside the begin/end scope, the basic I2C routines for writing (`i2c.tx`) and reading can be used. They work with the device selected with `i2c.begin`.

Most I2C devices use rather small data packets they exchange with the host. It's not uncommon to place the data on the data stack instead of providing a RAM buffer.

For these tasks the following words are provided. They to work within the begin/end scope described above.

`i2c.c@` **(addr – c)** Start a bus cycle and read one byte from the device. Afterwards release the bus.

`i2c.c!` **(c addr –)** Start a bus cycle and write one byte to the device. Afterwards release the bus.

`i2c.n!` **(x_n .. x_1 n addr –)** Start a bus cycle and send n bytes to the device. Afterwards the STOP condition is sent and the bus is released.

`i2c.n@` **(n addr – x_n .. x_1)** Start a bus cycle and receive n bytes from the device. To acomplish that, a start is triggered with the read bit of the addr set. Afterwards the STOP condition is sent and the bus is released.

`i2c.m!n@` **(n xm .. x1 m addr – x1 .. xn)** A combination of the two above. It creates the I2C transaction scope and sends m bytes to the device. Afterwards the data transfer direction is switched by sending a repeated start and n bytes are read from the device. Finally the STOP condition is sent and the bus is released.

Example - Port Expander

This example communicates with an I2C port expander PCF8574(a). The I2C address is usually between $30 and $3f.

Communication is not time critical, so the slow speed standard initialization is sufficient. To chack whether the device is present and works properly, an I2C bus scan is made first

```
(ATmega1280)> i2c.init.default
 ok
(ATmega1280)> i2c.detect
      0  1  2  3  4  5  6  7  8  9  A  B  C  D  E  F
 0:                       -- -- -- -- -- -- -- -- --
10:  -- -- -- -- -- -- -- -- -- -- -- -- -- -- -- --
20:  -- -- -- -- -- -- -- 27 -- -- -- -- -- -- -- --
30:  30 -- -- -- -- -- -- -- -- -- -- -- -- 3D -- --
40:  -- -- -- -- -- -- -- -- -- -- -- -- -- -- -- --
50:  50 51 -- -- -- -- -- -- -- -- -- -- -- -- -- --
60:  -- -- -- -- -- -- -- -- -- -- -- -- -- -- -- --
70:  -- -- -- -- -- -- -- --
 ok
(ATmega1280)>
```

A modification uses the value design pattern. With that, a new value is created that automatically fetches the data from the device when called and stores the new bit pattern with `TO`:

```
#require value.frt
#require quotations.frt

: i2c.cvalue ( n addr hwid -- )
  (value)
  dup , \ store the hwid
  [: dup @i ( hwid) i2c.c@ ;] ,
  [: dup @i ( hwid) i2c.c! ;] ,
  i2c.pe.c!  \ store inital data
;
```

Use it as follows

```
> $ff $3d i2c.cvalue keys ( sets all bits to HIGH)
ok
> $00 to keys ( set all bits to LOW )
ok
> keys $01 and ( if key 1 is pressed )
```

Big Data

Big data means that a device sends or receives more data than the data stack can hold. In this case, the `i2c.begin` and `i2c.end` in combination with the low level `i2c.tx`, `i2c.rx` etc should be used. One example is the I2C EEPROM block driver. It transfers 512 bytes in one transaction and uses a RAM buffer to actually hold the data.

See also:

I2C EEPROM, *I2C Bus Scanner*, and *I2C EEPROM Blocks*. *Values I2C Slave*

I2C Slave

The TWI module of the Atmega's allows slave operations as well. Unfortunately it is a lot more complex to setup and use. Basically an interrupt routine does all the work needed to receive and send data.

Initialization

The I2C slave mode needs only the address. This address has to be in the 7 bit range of the i2c address space. Any address will do.

```
> $42 i2c.slave.init
```

With that, an *I2C Bus Scanner* from the master's side reveals the presence of an device at address $42.

```
(ATmega1284P)> i2c.detect
      0  1  2  3  4  5  6  7  8  9  A  B  C  D  E  F
 0:                       -- -- -- -- -- -- -- -- --
10:  -- -- -- -- -- -- -- -- -- -- -- -- -- -- -- --
20:  -- -- -- -- -- -- -- 27 -- -- -- -- -- -- -- --
30:  30 -- -- -- -- -- -- -- -- -- -- -- -- 3D -- --
40:  -- -- 42 -- -- -- -- -- -- -- -- -- -- -- -- --
50:  50 51 52 -- -- -- -- -- -- -- -- -- -- -- -- --
60:  -- -- -- -- -- -- -- -- -- -- -- -- -- -- -- --
70:  -- -- -- -- -- -- -- --
 ok
```

Data exchange

This section describes work-in-progress. The design may change considerably in the future, check the actual code.

Circular buffer

The I2C slave mode uses a small circular buffer for data exchange. Bytes received are appended to it, wrapping around after 16 bytes. Every I2C read reads from it.

On the client side there are three words: `i2c-in` `i2c-out` and `i2c-buffer`. The last one is the base address of the i2c send/receive buffer. The `i2c-in` points into that buffer at the most recently received byte. Similarly the `i2c-out` points to the most recently read byte. Both pointers wrap around if the buffer size is reached.

Direct Address

TBD, Idea: send a start address and start reading from or writing to it until NACK. The EEPROM 24Cxx protocol is probably a good starting point.

I2C EEPROM VALUE

A nice feature of the VALUE concept is that the storage where the data is actually kept is not disclosed. That makes it easy to create a VALUE that behaves exactly like any other VALUE and keeps the data in an external I2C EEPROM.

```
#require value.frt
#require quotations.frt
#require ms.frt
#require i2c-eeprom.frt

\ 17      0    $50  i2c.value "name"
: i2c.ee.value ( n addr hwid -- )
  (value)
  over ,    \ store the addr
  [: dup @i ( addr ) swap 3 + @i ( hwid) @i2c.ee ;] ,
  [: dup @i ( addr ) swap 3 + @i ( hwid) !i2c.ee 5 ms ;] ,
  dup ,     \ store hwid
  !i2c.ee   \ store inital data
;
```

The #require directives are processed by the amforth-shell, of you don't use it, comment them out and make sure that the files and their further dependencies are sent to the controller beforehand.

Note the 5 ms delay after writing the data. This is to make sure that the EEPROM gets enough time to complete its internal activities.

The use is straightforward. Since there is no memory manager for the serial EEPROM, the location of the data is given explicitly when creating the value: address 0 on the device with the hardware id $50.

```
(ATmega16)> $beef 0 $50 i2c.ee.value answer
  ok
(ATmega16)> answer hex u.
 BEEF  ok
(ATmega16)> $dead to answer
 ok
(ATmega16)> answer hex u.
 DEAD  ok
(ATmega16)>
```

Don't forget to initialize the I2C hardware before use (e.g. in `turnkey`). Keep in mind, that the data stored in a value is much smaller than the page size of the EEPROM modules. Take care that the address used to place the data doen't cross the page boundary. Otherwise a wrap-around will happen and likely other data gets currupted.

See also:

I2C EEPROM, *I2C EEPROM Blocks*, *Two Wire Interface TWI/I2C*, and *Values*

Interrupt Service Routines AVR8

See also:

Interrupt Service Routines

```
\ TIMER_0 example
\
\ provides
\  timer0.tick      -- increasing ticker
\
\ older mcu's may need
\  TCCR0 constant TCCR0B
\  TIMSK constant TIMSK0

variable timer0.tick

: timer0.isr
  1 timer0.tick +!
;

: timer0.init ( preload -- )
   0 timer0.tick !
   TCNT0 c! \ preload
   ['] timer0.isr TIMER0_OVFAddr int!
;

\ some settings for 8bit timer to
\ get 1ms ticks
\ f_cpu  prescaler preload
\  16MHz   64       6
\   8MHz   64     131

: timer0.start
   0 timer0.tick !
   %00000011 TCCR0B c! \ prescaler 64
   %00000001 TIMSK0 c! \ enable overflow interrupt
;

: timer0.stop
  %00000000 TCCR0B c! \ stop timer
  %00000000 TIMSK0 c! \ stop interrupt
;
```

All interrupts are available for forth interrupts.

`int!` (and friends) uses the interrupt address from the data sheet as an index, but points to a different address in EEPROM. The index number is always identical to the interrupt number found in the data sheets.

See also:

Shells And Upload to deal with the register names.

Interrupt Critical Section

There are situations where no interrupts should be allowed. These code segments are usually called *critical sections*.

```
: bar ." bar" int? . ;
: baz ." baz" int? . ;
: qux ." qux" int? . ;

: foo \ prints bar-1 baz0 qux-1.
 bar
 critical[
   \ nothing will disturb us here
   baz
 ]critical \ now interrupts or other things may happen again
 qux ;
```

If the standard interrupt enabled system setup is used, calling **foo** should print `bar-1 baz0 qux-1`. **baz** can call words that use the critical[] word pair itself.

To temporarily turn off interrupts, the current state has to be stored. Since the critical section could be nested, a global variable is not the best solution. The following code example stores the information on the return stack. This requires some stack shuffling since a colon word is usually not allowed to manipulate the return stack outside of its own scope. This is the reason, why the critical section must be paired within one definition afterwards. Otherwise the return stack will have data that crashes the system.

```
\ global interrupt enable state as forth flag, AVR8
: int? ( -- f )
   SREG c@ SREG_I and 0> \ use the amforth-shell for the constants
;
\ the MSP 430 works similar
\ : int? sr@ 8 and 8 = ; \ sr@ : status register fetch

: critical[ \ ( -- ) R( XT -- f XT )
   r> int? >r >r \ keep the current state
   -int
;

: ]critical \ ( -- ) R( f XT -- XT )
   r> r> if +int then >r \ will crash if not matched
;
```

A possible modification is to add the PAUSE vector as well and turn off the cooperative multitasker during the critical section.

```
: critical[ \ ( -- ) R( XT -- n*f XT )
   r> int? >r  \ save current state of interrupt and multitasker
   ['] pause defer@ >r >r
   -int single \ no interrupts, no task switches
;

: ]critical \ ( -- ) R( n*f XT -- XT )
   r>
   r> ['] pause defer! \ restore multitasker
   r> if +int then     \ restore global interrupt flag
   >r \ will crash if not matched
;
```

Saving Power

The Atmegas have a number of power saving options. All of them are available with the sleep instruction. Amforth has a wrapper word with the same name which works on newer atmegas only. You can simply include the file

words/sleep.asm into your dict_appl.inc file and try assembling. If it does not produce an error, the sleep instruction can be used.

The next step is a system that uses interrupt driven terminal IO and possibly other interrupt sources. This makes it possible to include the sleep call into the pause deferred word.

```
: mypause 0 sleep ; ' mypause is pause
```

The exact meaning of the parameter (0) should be checked with the data sheet. Also make sure, that the interrupts are working properly. Otherwise the controller will sleep until the reset button is pressed..

NRWW Flash

Atmegas have a seperate flash region called NRWW. This area is rather small (2 to 8 KB depending on the controller type) and has some special features. It is primarily intended for boot loaders which can reprogram the RWW flash without a special programmer. Amforth uses this feature to do the dictionary management. Furthermore the NRWW section cannot self reprogram itself. Since this space is not available for user code amforth places as much as possible of its predefined words there.

If an application needs code space in the NRWW section for some tasks, amforth has to leave room for it. This can be done by setting the Assembler variable AMFORTH_RO_SEG to a value higher than NRWW_START_ADDR (the default). This leaves the flash between NRWW_START_ADDR and AMFORTH_RO_SEG free for other uses. The build process restructures the word placement accordingly.

Internally the files dict/nrww.inc and dict/rww.inc use predefined dictionary file sets to include the essential words in a way to maximize the NRWW utilization.

Reason For Reset

If the controller constantly resets and prints only (part of) the version string, it could be really nice to know why it behaves that way. The controller itself stores the reset reason in the machine control register, which gets unfortunately overwritten real soon. amforth reads its content upon startup into an unused register for later usage however.

Adding the following few lines to the applturnkey.asm file prints the numeric information at every reset

```
; print the numeric reason for reset
; forth code: 10 c@ . cr
.dw XT_DOLITERAL
.dw 10
.dw XT_CFETCH
.dw XT_DOT
.dw XT_CR
```

The following screen shows the program output after power on reset (4), pressing the reset button (2) and an ordinary call to cold:

```
-- power on --
> 4
amforth 4.7 ATmega328P 16000 kHz
-- pressing reset button --
> 2
amforth 4.7 ATmega328P 16000 kHz
> cold
0
amforth 4.7 ATmega328P 16000 kHz
>
```

The exact meaning of the numbers is available by reading the respective controller data sheet (8 usually means watch dog reset).

Serial Peripheral Interface SPI

The Serial Peripheral Interface is used for high-speed data exchange between the controller and some peripheral devices. There are several modes available.

It consists of three signal lines plus one per peripheral device (called slave). All peripheral devices share the signal lines and use the selecting line exclusivly. For any given data transfer only one of the selecting lines must be at LOW level, all others must be HIGH.

The basic data transfer operation is a data exchange of 8 bits. The sender transmits 8 bits and recieves 8 other bits in return from the communication partner.

The basic forth word is `c!@spi` which translates to character store/fetch via SPI. It uses the hardware SPI module of the controller and thus the pre-defined pins of it.

Basic Workflow

The built-in SPI module uses a few pins to establish the communication with any device. To distinguish between different SPI attached devices a separate signalling line is used: slave select. Every slave device is connected with one such line. The SPI communication takes place with the one which signalling line is LOW. All other lines have to be HIGH.

The setup of the slave select lines includes two steps: configuring as output and give it HIGH level when idle. Note that a pin that is configured as output will immediatly go to LOW level. This may disturb a SPI slave so after configuring the line direction the port has to go to HIGH exllicitly. When all slave select lines are configured, the remaining SPI setup can take place

```
\ requires bitnames, quotations and spi loaded
> PORTB 0 portpin: dev.ss \ define hardware
> dev.ss to spi.ss        \ assign ss pin to lib
> spi.ss is_output        \ short LOW pulse
> spi.ss high             \ de-select slave
> +spi                    \ turn on SPI module
```

Data Exchange

Any SPI transfer starts with pulling the slave select line LOW. Now any number of read/write operations may take place. To stop an exchange, the slace select line goes back to HIGH. This signals the slave device that the communication has ended and it usually goes back to a state that awaits a new commication.

The basic `c!@spi` is the building block for the next words

```
\ single byte transfers
: c@spi ( -- c ) 0 c!@spi ;
: c!cpi ( c -- ) c!@spi drop ;

\ read len bytes from SPI and store
\ them starting at addr
: n@spi ( addr len -- )
   0 ?do
    c@spi over c! 1+
   loop drop ;
\ write len bytes from addr to SPI
: n!spi ( addr len --- )
   0 ?do
    dup c@ c!spi 1+
   loop
   drop ;
```

The file `core/words/n-spi.asm` contains speed optimized implementations of the `n@spi` and `n!spi` words.

SD-Cards/MMC

MMC and SD-Cards have an SPI mode which is slower than the usual mode used on PC's but is simpler to program.

```
\ standard stuff, only if not already uploaded
#require postpone.frt
#require marker.frt
#require bitnames.frt

\ board definitions
#include netio.frt

\ SPI library
#require quotations.frt
#require 2rvalue.frt
#include spi.frt

\ SD Card specific
#include mmc.frt
```

The include order of the file is important. The board specfic definitions need to define the words `+spi`, `-spi` for global SPI port setup. In addition the commands `+mmc` and `-mmc` are used to perform a single communication with the device. The portpin definitions are not used elsewhere but should match the hardware.

```
PORTB 0 portpin: sdcard
sdcard to spi.ss

: +mmc
  sdcard low
;
: -mmc
  sdcard high
;
```

After successfully loading these files, the command `mmc_init` initializes the communication and enables the remaining access. It has to be issued every time the card has changed.

```
(ATmega640)> mmc_init
  ok
(ATmega640)> mmc_CID . cr 10 0 mmc.
 0
 1 50 41 53 30 32 47 46 12 39 B6 28 D6 0 B4 99  ok
(ATmega640)>
```

Telnet

Hardware

Telnet is a TCP/IP protocol. It requires a connection to a network (RJ45, twisted pair Ethernet is commonly used). A microcontroller like the Atmega needs a separate module to deal with all the low level stuff. For this recipe an ENC28J60 is used. It is connected via SPI to the Atmega. In addition, the interrupt line of the enc28j60 (pin4) has to be connected to INT2 (pin3 on an Atmega644).

The software needs slightly more that 1KB RAM for itself (mostly buffers), so only the bigger types satisfy this requirement.

Software

The software is currently only available in the Community Repository

Every network needs some settings. As of now, they are hard coded into the code, so you need to change the source code for the MAC address and the IP address in the `anc28j60.frt` :

```
\ *** own MAC address ***
$00 constant Mymac1
$22 constant Mymac2
$F9 constant Mymac3
$01 constant Mymac4
$36 constant Mymac5
$B6 constant Mymac6
\ *** own IP address ***
&192 constant Myip1
&168 constant Myip2
&002 constant Myip3
&079 constant Myip4
```

The code assumes a /24 network for the other network settings.

Using

After uploading the code base (`4th_mod1.frt` includes most of the dependencies) the serial port is still the command prompt. With the command `+telnet` the network is started and the TCP Port 23 is opened. In this stage, a network ping should work

```
serial terminal:
|> +telnet
| ok
|> Send Ping Reply !
|Send Ping Reply !
|Send Ping Reply !
|Send Ping Reply !
```

```
remote shell:
|$ ping 192.168.2.79
|PING 192.168.2.79 (192.168.2.79) 56(84) bytes of data.
|64 bytes from 192.168.2.79: icmp_seq=1 ttl=64 time=1037 ms
|64 bytes from 192.168.2.79: icmp_seq=2 ttl=64 time=75.1 ms
|64 bytes from 192.168.2.79: icmp_seq=3 ttl=64 time=19.0 ms
|64 bytes from 192.168.2.79: icmp_seq=4 ttl=64 time=19.0 ms
|64 bytes from 192.168.2.79: icmp_seq=5 ttl=64 time=19.0 ms
```

To get a telnet session, the amforth command interpreter has to switch its IO

```
serial terminal:
|> +telnet
| ok
|> +tnredir
```

```
remote shell:
$ telnet 192.168.2.79
|Trying 192.168.2.79...
|Connected to 192.168.2.79.
|Escape character is '^]'.
|Start Telnet Server:
| ok
|> 1 2 + .
|1 2 + .
|3  ok
|>
| ok
|> : hi ." Howdy, mate!" cr ;
|: hi ." Howdy, mate!" cr ;
```

```
| ok
|>
| ok
|> hi
|hi
|Howdy, mate!
| ok
|>
| ok
|> -tnredir
|-tnredir
```

```
serial terminal:
|Stop Telnet Server !  ok
|> hi
|Howdy, mate!
| ok
|>
```

Timer

The timer library in the `lib/hardware` directory consists basically of two parts: an access module and a generic module that depends on one of the access modules.

The access module (in `timer0.frt` and `timer1.frt`) encapsulate the access to the selected timer. It uses interrupts to create a millisecond counter for common usage. This millsecond counter is a single cell variable **`timer0.tick`** that increments freely and wraps around every 65,5 seconds.

The counter is started with the command **`timer0.start`**. It automatically adapts to the actual controller clock rate.

The generic routines rely on this counter. A timer is simply a single cell number that is either the starting value of the millisecond counter (e.g. for **`elapsed`**) or the stop value (**`after`**).

To get a timer get the current value of the tick. With that number you can call **`elapsed`** to get the number of milliseconds since start. To check whether a timer is expired you need to calculate the end time by adding the time span to the current tick value. The word **`expired?`** compares the current tick value with that calculated time and leaves a flag.

The words are multitasker friendly (by calling **`pause`** whenever useful. The words provided so far are

- **`expired?` (t – flag) checks whether a timers has expired. calls `pause`** internally.
- **`elapsed` (t – n) gets the number of milliseconds since the timer** has started.
- **`ms`** (u –) alternative implementation of standard word **`ms`**
- **`after`** (XT u –) waits u milliseconds and executes XT afterwards.
- **`every` (XT n –) executes XT every n milliseconds. The XT has the stack** effect (– f) for f beeing a flag indicating whether or not terminating the every loop.

An usage example is the *Loop With Timeout*. It is used as an replacement for begin, and takes an number as the amount of milliseconds the loop has to finish, otherwise an exception is thrown.

Two Wire Interface TWI/I2C

The Two Wire Interface TWI connects peripheral devices with the controller. It is compatible with the I2C bus so any I2C device can be connected to the TWI. The bus has 2 signal lines (plus ground and V+). Every device has its own unique address. Multiple devices can be connected as long as they use different addresses. Most I2C devices use jumpers to select from a (usually short) list of possible devices, limiting the number of identical devices.

SCL Clock Calculator

Most client devices want a clock speed of 100 kHz or 400 kHz. The bitrate register should be well above 10 if the controller is the bus master. The calculation formula is

$$twiclock = \frac{cpuclock}{16 + 2 * bitrateregister * 4^{prescaler}}$$

The next table shows the resulting twi clocks for a 8MHz device clock

prescaler	bitrate register (may be any value between 0 and 255)						
	4	8	16	32	64	128	255
0	333.333	250.000	166.667	100.000	55.556	29.412	15.209
1	166.667	100.000	55.556	29.412	15.152	7.692	3.891
2	55.556	29.412	15.152	7.692	3.876	1.946	978
3	15.152	7.692	3.876	1.946	975	488	245

Basic words

The foundation of the TWI/I2C library is the file `i2c.frt`. It wraps the low level access to the TWI module registers and defines the basic commands. It depends on the bitnames library.

The library uses the 7bit addresses. The 8th bit to distinguish between read and write access is added internally with the words `i2c.wr` and `i2c.rd`.

I2C Data Exchange

The I2C Data Exchange is initiated with `i2c.begin`. This word takes a 7bit I2C hardware address as parameter and aquires the bus. It sends the I2C START condition too.

Next the data read/write actions take place. All communication is directed to the selected device only. Do not send a STOP condition.

The final action is the `i2c.end` which releases the bus and sends the I2C STOP condition. Thereafter the next bus cycle can start.

See also:

I2C Generic, *I2C Bus Scanner*, *I2C EEPROM VALUE*, *I2C EEPROM* and *I2C EEPROM Blocks*

Usart Settings

There is some confusion concerning how usart settings should be made.

During assembly, the typical error message looks like

```
atmega16.asm(26): warning: Use of undefined or forward referenced symbol 'TXEN0' in .equ/.set
```

The symbol naming is based upon Atmel's naming conventions. If the controller has only one usart module, it is named either `usart` or `usart0`. Newer Atmegas use the 0 regardless of the real number of usart modules, older ones omit the 0 completely. You definitely have to check the datasheet.

The following controllers use the old schema, they need the `usart` file:

```
8515def.inc:.equ    RXEN    = 4 ; Receiver Enable
8535def.inc:.equ    RXEN    = 4 ; Receiver Enable
m103def.inc:.equ    RXEN    = 4 ; Receiver Enable
m163def.inc:.equ    RXEN    = 4 ; Receiver Enable
m16Adef.inc:.equ    RXEN    = 4 ; Receiver Enable
m16def.inc:.equ RXEN    = 4 ; Receiver Enable
m323def.inc:.equ    RXEN    = 4 ; Receiver Enable
m32Adef.inc:.equ    RXEN    = 4 ; Receiver Enable
```

```
m32def.inc:.equ RXEN    = 4 ; Receiver Enable
m8515def.inc:.equ   RXEN    = 4 ; Receiver Enable
m8535def.inc:.equ   RXEN    = 4 ; Receiver Enable
m8Adef.inc:.equ RXEN    = 4 ; Receiver Enable
m8def.inc:.equ  RXEN    = 4 ; Receiver Enable
pwm216def.inc:.equ  RXEN    = 4 ; Receiver Enable
pwm2Bdef.inc:.equ   RXEN    = 4 ; Receiver Enable
pwm2def.inc:.equ    RXEN    = 4 ; Receiver Enable
pwm316def.inc:.equ  RXEN    = 4 ; Receiver Enable
pwm3Bdef.inc:.equ   RXEN    = 4 ; Receiver Enable
pwm3def.inc:.equ    RXEN    = 4 ; Receiver Enable
```

All others use a number.

A simple approach that works in most cases is as follows: delete/change all occurrences of the 0 character in the following excerpt from your version of the `template.asm` file.

```
.include "drivers/usart_0.asm"
```

Please note, that the file is named `drivers/usart.asm` not `drivers/usart_.asm`.

Similar changes are needed for the other usart modules (e.g. usart3).

Watchdog

The watchdog is a build-in module present in all atmega controllers. It triggers a reset if for a predefined period of time nothing is done to prevent it.

The controller has a special machine instruction for the watchdog reset called `wdr`. Amforth has a wrapper forth word with the same name after including the file `core/words/wdr.asm`.

This word needs to be called often enough to keep the watchdog from resetting the controller. For a system that basically waits at the command prompt the `pause` command could be sufficient:

```
> ' wdr is pause
```

Another potential place for adding a wdr is the inner interpreter by either changing `amforth-interpreter.asm` or the `core/words/exit.asm`. Adding the (machine) wdr instruction there makes sure that the watchdog is reset as long as the inner interpreter works.

Initialization

Early atmega variants need to initialize the watchdog every time after a reset, newer ones keep it active even over resets. This may cause troubles since the WDR needs to be called much earlier for these controllers. One solution is to place the WDR activation at the beginning of the turnkey actions.

Acknowledgements

This recipe is based upon work by David Wallis.

Hardware Modules (MSP430)

Interrupts on the MSP430

Currently (version 6.5 and up) only the MSP430 G2553 has some preliminary support for interrupt service routines written in high level Forth. Most of the words from the AVR world work exactly the same way:

See also:

Interrupt Service Routines, *Interrupt Critical Section*

The ISR support is disabled by default. To enable it, edit the application master file and add the following line to it

```
.set WANT_INTERRUPTS = 1
```

Now rebuild and reflash the controller. Be aware of the additional code space requirements and a slightly slower overall system speed.

Currently only the G2553 supports this system. Unlike the AVR world, not every index of the ISR table is used actually, so a mapping is used to minimize the code space usage.

Index	Mapping G2553
1	Port 1 IO
2	Port 2 IO
3	ADC IO
4	UCSI Transmit
5	UCSI Receive
6	Timer A CC1
7	Timer A CC0
8	Comparator A
9	Timer B CC1
10	Timer B CC0

The XT table is stored in the Info Flash. To keep it permanently, use the **SAVE** command. All ISR have the default action **noop** and do nothing at all.

See also:

Interrupt Service Routines AVR8

CHAPTER

SIX

RECOGNIZERS

The goal of a recognizer is to dynamically extent the Forth command interpreter and make it understand and handle new data formats as well as new synatax's. The present, 2nd generation recognizers achieve this by generalizing the classic interpreter with an API to factor the components. Recognizers are portable across different forth's.

Recognizers are not a new concept for forth. They have been discussed earlier.

- compgroups.net/comp.lang.forth/additional-recognizers/734676 in 2003.
- Number Parsing Hooks in 2007.
- Presentations held at Euroforth conferences
  - 2012 (B. Paysan)
  - 2015 (A. Ertl)
  - 2016 (A.Ertl with Video)

More recognizer examples are available at The Forth Net.

Version 4

Version 4 (pdf), (txt)

Forth source code and test code require Stack.frt and tester.fs.

Most changes are only wording changes. Most importandly many of the key words are renamed to better ones. They now describe what they do in a less confusing way (I hope). No changes were made to the stack effect so all existing code continues to work with a simple search and replace.

v3	v4
recognizer	rec-stack
recognizer:	dt-token:
do-recognizer	recognize
r>*	dt>*
r:fail	dt:null

non-normative wording changes

v3	v4
rec:word	rec:find
r:word	dt:xt
r:num	dt:num
r:dnum	dt:dnum
r:float	dt:float
r:name	dt:nt

The data type token DT is not new actually. It got only a more prominent role since it is one result of the parsing process but is not related to recognizers themselves. It provides information about the data type and how to handle a certain data type (hence the name) inside the interpreter. It is not relevant where it comes from.

The gforth team suggests that the `DT>x` words should have a different stack effect. `DT>COMP ( i*x DT:TOKEN -- j*y XT )`

The input is what comes from the recognizer parsing words, the result should be feedable directly to `EXECUTE` to achieve the desired semantics. The words may change the result set too. In the reference implementation this is not used however.

The primary purpose of this seems to be an optimization and an unification of the name token and the data type token for named words), so that DT>COMP becomes identical to NAME>COMPILE for name tokens.

Outdated

The 1st formal RFD (pdf), (txt) was published at october, 3 2014. Version 2 (pdf), (txt) has been published on september, 20 2015. It improves the proposed standard section and adds a long chapter discussing the recognizer design based on feedback from version 1. The 3rd version has been started immediately after v2 due to a suggestion changing the *POSTPONE* action. Version 3 (pdf), (txt).

The Sourcecode requires Stack.frt. In the Recognizer-Test are many tests and example implementation for gforth, MPE's vfxlin and Swift-Forth from Forth Inc.

The papers linked below give some historical background information.

- First Generation is an all in one implementation.
- Second Generation describes the factored component approach.

Namespace RFD

An inofficial Namespace RFD.

CHAPTER

SEVEN

REFERENCE CARD

General

AmForth is a 16bit ITC forth. It is almost compatible with the forth standards from 1994 and 200x. It runs on the bare metal controller with no further dependencies. The interpreter operates on whitespace delimited words. The compiler is a single pass compiler that writes directly to the flash based dictionary.

There are three distinct address spaces for flash, eeprom and RAM. Flash is addressed word wise (16 bits per address unit), RAM and EEPROM is accessed byte wise (8bits per address unit). The standard return stack has 40 cells, the data stack is limited by the available RAM size.

Numbers can be prefixed by $ to indicate hexadecimal, % for binary and # for decimal numbers. A trailing dot is used for double cell numbers.

Words not found here are not part of the compileable core system. Their forth sources are in the `/lib` directory, usually named after the word name: e.g. **`2dup`** is defined in a file named `2dup.frt`.

Arithmetics (AVR8)

- **`1-`** (n1 – n2) optimized decrement
- **`1+`** (n1|u1 – n2|u2) optimized increment
- **`2/`** (n1 – n2) arithmetic shift right
- **`2*`** (n1 – n2) arithmetic shift left, filling with zero
- **`abs`** (n1 – u1) get the absolute value
- **`><`** (n1 – n2) exchange the bytes of the TOS
- **`cell+`** (a-addr1 – a-addr2) add the size of an address-unit to a-addr1
- **`d2/`** (d1 – d2) shift a double cell value right
- **`d2*`** (d1 – d2) shift a double cell left
- **`dabs`** (d – ud) double cell absolute value
- **`dinvert`** (d1 – d2) invert all bits in the double cell value
- **`d-`** (d1 d2 – d3) subtract d2 from d1
- **`dnegate`** (d1 – d2) double cell negation
- **`d+`** (d1 d2 – d3) add 2 double cell values
- **`invert`** (n1 – n2) 1-complement of TOS
- **`log2`** (n1 – n2) logarithm to base 2 or highest set bitnumber
- **`lshift`** (n1 n2 – n3) logically shift n1 left n2 times
- **`-`** (n1|u1 n2|u2 – n3|u3) subtract n2 from n1

- **m+** (d1 n1 – d2) add a number to a double cell
- **m*** (n1 n2 – d) multiply 2 cells to a double cell
- **+** (n1 n2 – n3) add n1 and n2
- **+!** (n a-addr –) add n to content of RAM address a-addr
- **popcnt** (n1 – n2) count the Number of 1 bits (population count)
- **rshift** (n1 n2 – n3) shift n1 n2-times logically right
- **/mod** (n1 n2 – rem quot) signed division n1/n2 with remainder and quotient
- **true** (– -1) leaves the value -1 (true) on TOS
- **um/mod** (ud u2 – rem quot) unsigned division ud / u2 with remainder
- **um*** (u1 u2 – d) multiply 2 unsigned cells to a double cell
- **u/mod** (u1 u2 – rem quot) unsigned division with remainder
- **0** (– 0) place a value 0 on TOS

Compare (AVR8)

- **d=** (n1 n2 – flag) compares two double cell values
- **d0>** (d – flag) compares if a double double cell number is greater 0
- **d0<** (d – flag) compares if a double double cell number is less than 0
- **=** (n1 n2 – flag) compares two values for equality
- **>** (n1 n2 – flag) flag is true if n1 is greater than n2
- **0>** (n1 – flag) true if n1 is greater than 0
- **0<>** (n – flag) true if n is not zero
- **u<** (u1 u2 – flasg) true if u1 < u2 (unsigned)
- **0=** (n – flag) compare with 0 (zero)
- **0<** (n1 – flag) compare with zero

Compiler (AVR8)

- **code** (–) (C: cchar –) create named entry in the dictionary, XT is the data field
- **:noname** (– xt) create an unnamed entry in the dictionary, XT is DO_COLON
- **does>** (i*x – j*y) (R: nest-sys1 –) (C: colon-sys1 – colon-sys2) organize the XT replacement to call other colon code
- **end-code** (–) finish a code definition
- **exit** (–) (R: nest-sys –) end of current colon word
- **header** (addr len wid – nfa) creates the vocabulary header without XT and data field (PF) in the wordlist wid
- **i** (– n) (R: loop-sys – loop-sys) current loop counter
- **i-cell+** (addr – addr') skip to the next cell in flash
- **immediate** (–) set immediate flag for the most recent word definition
- **j** (– n) (R: loop-sys1 loop-sys2 – loop-sys1 loop-sys2) loop counter of outer loop

- **s,** (addr len –) compiles a string from RAM to Flash
- **unloop** (–) (R: loop-sys –) remove loop-sys, exit the loop and continue execution after it
- **user** (n cchar –) create a dictionary entry for a user variable at offset n
- **wlscope** (addr len – addr' len' wid) dynamically place a word in a wordlist. The word name may be changed.

Dictionary (AVR8)

- :command:'' (n –) compile 16 bit into flash at DP

Environment (AVR8)

- **/pad** (– padsize) Size of the PAD buffer in bytes
- **wordlists** (– n) maximum number of wordlists in the dictionary search order
- **mcu-info** (– faddr len) flash address of some CPU specific parameters

Extended VM (AVR8)

- **a@** (– n2) Read memory pointed to by register A (Extended VM)
- **a@-** (– n) Read memory pointed to by register A, decrement A by 1 cell (Extended VM)
- **a@+** (– n) Read memory pointed to by register A, increment A by 1 cell (Extended VM)
- **a!** (n –) Write memory pointed to by register A (Extended VM)
- **a!-** (– n2) Write memory pointed to by register A, decrement A by 1 cell (Extended VM)
- **a!+** (– n2) Write memory pointed to by register A, increment A by 1 cell (Extended VM)
- **a>** (n1 – n2) read the A register (Extended VM)
- **b@** (– n2) Read memory pointed to by register B (Extended VM)
- **b@-** (– n) Read memory pointed to by register B, decrement B by 1 cell (Extended VM)
- **b@+** (– n) Read memory pointed to by register B, increment B by 1 cell (Extended VM)
- **b!** (n –) Write memory pointed to by register B (Extended VM)
- **b!-** (– n2) Write memory pointed to by register B, decrement B by 1 cell (Extended VM)
- **b!+** (– n2) Write memory pointed to by register B, increment B by 1 cell (Extended VM)
- **b>** (n1 – n2) read the B register (Extended VM)
- **na@** (n1 – n2) Read memory pointed to by register A plus offset (Extended VM)
- **na!** (n offs –) Write memory pointed to by register A plus offset (Extended VM)
- **nb@** (n1 – n2) Read memory pointed to by register B plus offset (Extended VM)
- **nb!** (n offs –) Write memory pointed to by register B plus offset (Extended VM)
- **>a** (n –) Write to A register (Extended VM)
- **>b** (n –) Write to B register (Extended VM)

Interrupt (AVR8)

- **int@** (i – xt) fetches XT from interrupt vector i
- **-int** (–) turns off all interrupts
- **+int** (–) turns on all interrupts
- **int!** (xt i –) stores XT as interrupt vector i
- **int-trap** (i –) trigger an interrupt
- **#int** (– n) number of interrupt vectors (0 based)

Logic (AVR8)

- **and** (n1 n2 – n3) bitwise and
- **negate** (n1 – n2) 2-complement
- **not** (flag – flag') identical to 0=
- **or** (n1 n2 – n3) logical or
- **xor** (n1 n2 – n3) exclusive or

MCU (AVR8)

- **!@spi** (n1 – n2) SPI exchange of 2 bytes, high byte first
- **bm-clear** (bitmask byte-addr –) clear bits set in bitmask on byte at addr
- **bm-set** (bitmask byte-addr –) set bits from bitmask on byte at addr
- **bm-toggle** (bitmask byte-addr –) toggle bits set in bitmask on byte at addr
- **n@spi** (addr len –) read len bytes from SPI to addr
- **n!spi** (addr len –) write len bytes to SPI from addr
- **rx?-poll** (– f) check if a character can be appended to output queue using register poll
- **rx-poll** (c –) wait for one character and read it from the terminal connection using register poll
- **c!@spi** (txbyte – rxbyte) SPI exchange of 1 byte
- **tx?-poll** (– f) check if a character can be send using register poll
- **tx-poll** (c –) check availability and send one character to the terminal using register poll
- **ubrr** (– v) returns usart UBRR settings
- **+usart** (–) initialize usart
- **wdr** (–) calls the MCU watch dog reset instruction

Memory (AVR8)

- **c@** (a-addr - c1) fetch a single byte from memory mapped locations
- **cmove** (addr-from addr-to n –) copy data in RAM, from lower to higher addresses
- **cmove>** (addr-from addr-to n –) copy data in RAM from higher to lower addresses.
- **c!** (c a-addr –) store a single byte to RAM address

- **(!i-nrww)** (n f-addr –) writes n to flash memory using assembly code (code to be placed in boot loader section)
- **@** (a-addr – n) read 1 cell from RAM address
- **@e** (e-addr - n) read 1 cell from eeprom
- **@i** (f-addr – n1) read 1 cell from flash
- **@u** (offset – n) read 1 cell from USER area
- **fill** (a-addr u c –) fill u bytes memory beginning at a-addr with character c
- **!** (n addr –) write n to RAM memory at addr, low byte first
- **!e** (n e-addr –) write n (2bytes) to eeprom address
- **!u** (n offset –) write n to USER area at offset

Multitasking (AVR8)

- **cas** (new old addr – f) Atomic Compare and Swap: store new at addr and set f to true if contents of addr is equal to old.
- **pause** (–) Fetch pause vector and execute it. may make a context/task switch

Numeric IO (AVR8)

- **hld** (– addr) pointer to current write position in the Pictured Numeric Output buffer

Search Order (AVR8)

- **forth-wordlist** (– wid) get the system default word list
- **get-current** (– wid) get the wid of the current compilation word list
- **set-current** (wid –) set current word list to the given word list wid
- **wordlist** (– wid) create a new, empty wordlist

Stack (AVR8)

- **2r@** (– d) (R: d – d) fetch content of TOR
- **2r>** (– x1 x2) (R: x1 x2 –) move DTOR to TOS
- **2>r** (x1 x2 –) (R: – x1 x2) move DTOS to TOR
- **drop** (n –) drop TOS
- **dup** (n – n n) duplicate TOS
- **lp0** (– addr) start address of leave stack
- **nip** (n1 n2 – n2) Remove Second of Stack
- **nr>** (– x-n .. x-1 n) (R: x-n .. x-1 n –) move n items from return stack to data stack
- **n>r** (x-n .. x-1 n –) (R: – x-n .. x-1 n) move n items from data stack to return stack
- **over** (x1 x2 – x1 x2 x1) Place a copy of x1 on top of the stack

- **?dup** (n1 – [n1 n1] | 0) duplicate TOS if non-zero
- **rot** (n1 n2 n3 – n2 n3 n1) rotate the three top level cells
- **rp@** (– n) current return stack pointer address
- **rp!** (addr –) (R: – x*y) set return stack pointer
- **r@** (– n) (R: n – n) fetch content of TOR
- **r>** (– n) (R: n –) move TOR to TOS
- **sp@** (– addr) current data stack pointer
- **sp!** (addr – i*x) set data stack pointer to addr
- **swap** (n1 n2 – n2 n1) swaps the two top level stack cells
- **>r** (n –) (R: – n) move TOS to TOR

String (AVR8)

- **compare** (r-addr r-len f-addr f-len – f) compares two strings in RAM

System (AVR8)

- **allot** (n –) allocate or release memory in RAM
- **cold** (i*x –) (R: j*y –) start up amforth.
- **(defer)** (i*x – j*x) runtime of defer
- **(value)** (– n) runtime of value
- **Edefer@** (xt1 – xt2) does the real defer@ for eeprom defers
- **Edefer!** (xt1 xt2 –) does the real defer! for eeprom defers
- **execute** (xt –) execute XT
- **nfa>lfa** (nfa – lfa) get the link field address from the name field address

System Value (AVR8)

- **dp** (– f-addr) address of the next free dictionary cell
- **ehere** (– e-addr) address of the next free address in eeprom
- **environment** (– wid) word list identifier of the environmental search list
- **forth-recognizer** (– addr) address of the next free data space (RAM) cell
- **here** (– addr) address of the next free data space (RAM) cell
- **(marker)** (– e-addr) The eeprom address until which MARKER saves and restores the eeprom data.
- **!i** (n addr –) Deferred action to write a single 16bit cell to flash
- **turnkey** (– n*y) Deferred action during startup/reset

System Variable (AVR8)

- **latest** (– addr) system state
- **lp** (– addr) leave stack pointer
- **newest** (– addr) system state
- **state** (– addr) system state
- **up@** (– addr) get user area pointer
- **up!** (addr –) set user area pointer

Time (AVR8)

- **1ms** (–) busy waits (almost) exactly 1 millisecond

Tools (AVR8)

- **cfolddepth** (flagset – n) constant fold depth
- **ee>ram** (e-addr r-addr len –) copy len cells from eeprom to ram
- **icompare** (r-addr r-len f-addr f-len – f) compares string in RAM with string in flash. f is zero if equal like COMPARE
- **icount** (addr – addr+1 n) get count information out of a counted string in flash
- **immediate?** (flagset – +/-1) return +1 if immediate, -1 otherwise, flag from name>flags
- **init-ram** (–) setup the default user area from eeprom
- **itype** (addr n –) reads string from flash and prints it
- **name>flags** (nt – f) get the flags from a name token
- **nfa>cfa** (nt – xt) get the XT from a name token
- **unused** (– n) Amount of available RAM (incl. PAD)

CHAPTER

EIGHT

HISTORY

9.7.2015: release 5.9

- lib: **for** and **next**. The **i** and **j** can be used as well.
- core(AVR8): clear all RAM at **cold**.
- core(MSP430): **DEFER** and **VALUE** were missing in release 5.8. **pause** and **turnkey** using them (RAM based, save-able to info flash).
- core(All): **'** uses the recognizer stack.
- core(ALL): Fix regression in **literal** (broke e.g. quotations)

25.3.2015: release 5.8

- core(MSP430): new **:noname** and the **defer** and **value** groups of commands.
- core(All): words with the same name do the same (mostly).
- core(AVR8): introduce **<builds**. Together with **does>** saves one flash erase cycle and makes the source work on the MSP430 as well.

1.2.2015: release 5.7

- core(ALL): **name>interpret** and **name>compile** added. New Recognizer **rec:name** able to replace **rec:word**. Uses name tokens (Forth 2012) instead of execution tokens.
- core(ALL): Lots of bugfixes and regressions. The AVR port should be fully usable again.
- core(MSP430): restructure of the init process: **cold** now transfers the data from INFO flash back to RAM if BASE is set and **SAVE** was executed. That way the user code now correctly survives a restart. **SAVE** is much like marker that overwrites the previous state and gets no name.

22.12.2014: release 5.6

- core(AVR): **icompare** got the same return flag semantics as **compare**. The **leave** and **?do** forward branches are now resolved at compile time, saves one cell per loop on the return stack at runtime.
- core(AVR): interrupt vectors are moved from RAM to EEPROM. Saves RAM space and simplifies turnkey actions (remove any **int!** from your turnkey!)
- core: re-arranged source files: controller specific and common code.
- New architecture: MSP430 (G2553) as used in the *Texas Instruments LaunchPad 430* with code from Camelforth and 4€4th.

- core: generalized existing *Configuration Stacks* in EEPROM into **map-stack**, **get-stack** and **set-stack**. Used for the search order and recognizer stacks.
- all: changed license to GPLv3.

6.10.2014: release 5.5

- core: Bugfix in **warm** to initialize the interpreter for **turnkey**. Thanks to David.
- core: bugfixes for handling some negative numbers in **+loop** and ***/**.
- core: simplified assembly primitves for counted loops. They are now faster except for **i**. The return stack gets different numbers now.
- core: rewrite of **accept**. The user visible change is that the final CR/LF is no longer sent here. The forth text interpreter does it elsewhere thus the user interface is unchanged.
- core: Fixed a regression introduced after 5.1: a<b is not always the same as a-b<0.

16.8.2014: release 5.4

- lib: Almost complete *Blocks* wordset support. Only a few dark corners behave differently.
- lib: renamed TWI to I2C, added many tools for it *I2C EEPROM VALUE*, *I2C EEPROM Blocks* and a few more.
- recipes: Test Driven Development with *Amforth*, *Conditional Interpret*
- lib: Fully support the ANS94 String wordset.
- core: Double cell return stack access words (**2>r** and **2r>**) missed the internal swap's. Added new **2r@**.
- lib: Limited LOCALs

7.5.2013: release 5.3

- core: 2nd generation of *Recognizer* and their use for native *String literals*.
- core: renamed **edp** to **ehere**. **here** points to data space, **ehere** points to eeprom data space.
- core: merged code for defer's and value's. Speed improvements for defer actions.
- community: MMC/SD-Card from Lubos (So Sorry for beeing late) and TCP/IP (*Telnet*). Many Thanks to Jens. Speed optimized words for SPI in amforth core.
- doc: Japanese Getting Started
- doc: new recipes: *Forward Declarations*, *Extended VM*, *Quotations*, *Exceptions*, *Coroutines*, updated recipes: *Serial Peripheral Interface SPI*, *Arduino Hello World*

23.12.2013: release 5.2

- Improved and extended *Values*
- Forth 2012 Traverse-Wordlist
- improved documentation
- core: added **d0=** and **0=** as assembly primitives and use them in other compare operations. Saves a lot of code space.

- Wordlist entries are now 8bit clean. Words with umlauts or e.g. Greek commands work as expected, unless the terminal does not cooperate. Thanks to Enoch.

```
> : Σ  0 swap 0  do  +  loop  ;
 ok
> 7 8 9 3 Σ .
 24  ok
>
```

5.4.2013: release 5.1

- core: Automatic scoping of words. A system hook can be used to use a different wordlist than CURRENT to place a new word in. Thanks to Enoch for the idea and the code.
- lib: very flexible CRC8 checksum generator and checker. Thanks to Enoch.
- recipes: *Interrupt Critical Section*, *Unbreakable AmForth*, *Efficient Bit Manipulation*, *Dump Utilities*, *Ctrl-C* Thanks to Enoch and the others on the mailling list for code and inspiration.
- core: **-int** does no longer leave the SREG register. It only turns off the global interrupt flag. Thanks to Enoch.
- lib: major 1-wire enhancements: CRC checks and a better naming convention for all words. Thanks to Erich for help and substantial contributions.
- appl: added the Arduino Leonardo. avrdude needs a small patch to write properly the eeprom on the Atmega32U4.
- core: New **popcnt** (n – m) counts the Hamming Weight of the given number.
- core: renamed **baud** to **ubrr**.
- core: **nfa>lfa** is a factor in a number of words. It generates the link field address from a given name field address.
- doc: Farewell docbook XML, welcome reST. All documentation will be written in reStructured Text.
- lib: Simple Quotations. Their typical use case is

```
: foo ... [: bar baz ;] ... ;
```

which is equivalent to

```
:noname bar baz ; Constant#temp#
: foo ... #temp# ...;
```

27.12.2012: release 5.0

- lib: Access to *Dallas 1-Wire Devices*. Based on code and ideas by Bradford J. Rodriguez for the 4€4th project.
- lib: many Arduino ports have more than one purpose. The forth200x Synonym gives them useful alias names.
- Arduino: Added definitions for all ports based upon *Digital Ports*.
- recipes: There are now more than 30 *Cookbook* in the cookbook: many debug tools, loop with timeout, porting from C, and interrupts to mention some of them.
- core: autogenerate **sleep** depending on register availability. **sleep** on an Atmega32 is very different from an Atmega328p. The parameters for calling it at the forth level are the same however. The include list for the assembler is expanded with `core/<device>/` to find the right `sleep.asm` file.

- core: rudimentary error checks in the compiler: There has to be branch destination on the stack. If there is nothing, a stack underflow exception gets thrown.

```
> : ?do i . loop ;
?? -4 14
> : t2 ?do i . loop ;
 ok
>
```

- core: Number sign may follow the number base prefix as specified in Forth200x Number Prefix. Added the character # as prefix for decimal as well.
- core: fixed a regression in **toupper** caused by making **within** standards compliant. Thanks to Arthur for the fix. **[compile]** fixed as well.

27.7.2012: release 4.9

- core: initialisation of the USER area is now done in WARM. please check your TURNKEY to remove the call to it. Thanks to Erich for pointing to.
- core: regenerated the devices files with the part description files from studio v6. added bitnames to the forth and python modules (later to be used with the shell).
- tools: completly new shell program with cool upload features from Keith: amforth-shell It has command completion, full command history, automatic controller identification with all register names and much more. Updated the *Shells And Upload* for this task
- lib: re-arranged source files, improved timer modules.
- lib: **case** did not work at all. Thanks to Jan for telling.
- core: the new variable **latest** has the XT of the currently being defined colon word.
- core: **unused** should tell the free amount of memory in the area **here** points to: RAM. Thanks to Carsten for the hint.
- core: introducing an environment query for basic controller information: memory sizes, max dictionary address: **mcu-info**. The structure itself is not yet finalized. See at the end of a core/<device>/device.asm file for details.
- tools: The upload utilities were unable to process absolute filenames (those beginning with a /) Thanks to Carsten for the fix.

26.3.2012: release 4.8

- core: fixed a bug in **na@** and **nb@** (extended VM registers).
- core: redesigned **to** for use in LOCALs and RAM-based values.
- core: **.s** is stripped down to a single line output of the stack content only. Looks better in the call tracer and is more like other forth's.
- core: small atxmega updates. Unfortunatly avrdude cannot flash the boot loader section as expected.
- core: optional Unified memory address space. **@** and **!** use the range from 0 to RAMEND as RAM, from RAMEND+1 upwards the next addresses from EEPROM, until EEPROMEND is reached and the remaining addresses from flash.
- core: **environment?** can now be used in colon definitions. changed into loadable forth source instead of compile-time assembly.
- core: **itype** now sends proper (e.g. single byte) characters to **emit**.
- core: **type** is made more robust against **emit** errors.

- lib: **macro** and a *Defining and using Macros* recipe for using them.
- *Profiler* to count the number of calls.
- lib: **evaluate** for both RAM and Flash based strings.

4.2.2012: release 4.7

- recipes: *Multitasking*, *Reason For Reset* and *Tracer*
- core: new words from the STRINGS word set: **sliteral** and **compare**. Latter is a simplified version of the ANS94 spec: max 255 chars, (in)equality tests only.
- core: **source**, **refill** are now deferred words, based on the USER area. **>in** likewise. Based on ideas from Strong Forth.
- core: **/key** removed, it can be implemented by changing **refill**.
- lib: The multitasker could not work after power cycles. Thanks to Erich for fixing.

6.10.2011: release 4.6

- core: **words** shows the *first* entry in the search order list as specified by DPANS94.
- lib: new word **m*/** (d1 n1 n2 – d2), uses a triple cell intermediate for d1*n1.
- lib: new words **bm-set**, **bm-clear** and **bm-toggle** that efficiently change bits in RAM byte addresses. e.g. :command:‘ %0010 here bm-toggle‘ changes bit 2 in the RAM location at **here**.
- lib: renamed **spirw** to **c!@spi**, new word **!@spi** exchanges two bytes via SPI. Follows remotly the memory access word naming conventions.

29.6.2011: release 4.5

- arduino: re-arranged word placing to maximize usable flash (at least on a duemilanove device, the bigger variants like the sanguino and mega* still have room for improvement). The target mega is now called mega128.
- lib: `lib/buffer.frt` implements buffer:.
- doc: improved refcard. Thanks to Erich for input and patches.
- core: changed API of the Recognizer to the final addr/len pairs. Do not use counted strings any longer!
- core: new words **find-name** and **parse-name** follow Forth 200x and operate on the current input buffer, **word** is no longer used internally. Lots of internal code simplifications.
- core: **(create)** throws exception -16 if no name is given.
- core: exception -42 is really -4 (stack underflow).
- core: **digit?** again. Stack effect now compatible to gforth: **(char -- n true | false)**. Current setting of **base** is now taken internally.

24.5.2011: release 4.4

- examples: added a game of life and a queens puzzle solver.
- core: restructure of the RAM usage. You need to remove the **.set here = ...** line from your application definition file (template.asm).

- core: turn **cold** into the main initialization word and **warm** into some high level initialization.
- doc: updated Technical Documentation of Recognizers and Interrupt Processing. Reformatted the *Reference Card* to a more compact style.
- core: added **n>r** and **nr>** from Forth 200x.
- core: Redesign of Interrupt Handling. ISR Routines are still normal Colon Words and can deal with every kind of interupts. There are no lost interupts any longer. Based on Ideas from Wojciech (Tracker ID 2781547) and Al (mailling list).
- appl: Fixed a regression in the floating point library due to changes in **number** in post 4.0 releases. **>float** can now be used as the main part of a recognizer.
- core: added a compile time option WANT_IGNORECASE to make amforth case-insensitve, disabled by default.

1.5.2011: release 4.3

- core: **u>** had wrong stack effect in case of true result.
- core: **int-trap** triggers an interrupt from software.
- core: **/user** environment query gives the size of the USER area
- core: **sleep** takes the sleep mode as parameter.
- ex: added timer-interrupt.frt as an example for using interrupts with forth.
- pub: Erich has presented amforth at the Fosdem 2011 Slides and Proceedings (published with permission). Thanks Erich!
- core: simplified **get/set-order** with a changed eeprom content.
- doc: new user guide version from Karl (for version 4.2).
- core: renamed **e@/e!** to **@e/!e** to comply with the memory access wordset from forth200x, same with **i@/i!**.
- core: documentation fixes in many files: *Reference Card*.
- core: re-design of the (outer) interpreter using recognizers (dynamically extend the interpeter to deal with new semantics. Defined **get/set-recognizer** similiar to **get/set-order**.

19.9.2010: release 4.2

- core: fixed a regression for **i!** which made **marker** useless (among other oddities). Thanks to Marcin for the fix
- core: currently defined colon words are invisible until the final ;.
- applications: Leon contributed a IEEE754 floating point library in plain forth, Pito translated some basic words into assembly for speed.

2.9.2010: release 4.1

- core: new words **2>r**, **2r>** and **2literal**.
- core: converted most of the atmega part definition files with the pd2amforth utility. Please report any success / failure.
- doc: set the fuses to make the bootloader size as large as the NRWW size.

- core: abort assembling if flash usage is above limits.
- core: allow double cell numbers in colon definitions. Thanks to Pito for reporting the bug.

1.7.2010: release 4.0

- tools: amforth-upload.py optionally loads a device specific module and replaces register definitions with their values prior to sent the code to the controller. The device modules are auto-generated from the part description files.
- core: ANS94 mention that HERE points to the data (RAM) region. Re-introduced DP as the dictionary (Flash) pointer. **HEAP** is gone. Migrate old HEAP to HERE and old HERE to DP.
- core: save and clear the initial value of the MCU Status Register at address 10.
- tools: pd2amforth is now capable to generate the device definition files. It is no longer necessary to edit them manually.
- core: finally separated the terminal IO settings from the device definition files.
- core: optionally set `WANT_SPI` (or any other IO Module) to include the register definion names at build time.
- core: massivly restructured the `devices/` filesystem entry. Change your application files to include `device.asm` instead of the device name. Set the include directory to the proper subdirectory under `core/devices` as well.
- core: dynamically calculate the free space. Do not use all of it however, the data stack may grow.

```
s" /pad" environment?
```

- core: Simplified the Pictured Numeric Output words. They now use the memory area below **pad** (which is 100 bytes above HEAP) as the buffer region.
- appl: added the arduino board with some example codes. Currently with the Mega (Atmega1280), Duemilanove (Atmega328) and Sanguino (Atmega644p) controller types.

25.5.2010: release 3.9

- web: updated the Howto page to demonstrate *Redirect IO*.
- core: The Atmega2561 now fully works (incl the compiler).
- core, appl: Andy Kirby donated the device files and a full implemention for Arduino Mega with the Atmega1280.
- core: CPU Name, Forthname and Version strings can be accessed as environment queries.

25.4.2010: release 3.8

- core: turned **i!** into a deferred word.
- core: fix for **icompare** to make it work with all addr/len strings. Bug found and fixed by Michael and Adolf.
- core: re-implemented the **i!** in (mostly) assembly language to ease integration into bootloaders.
- core: factor the three prompts into compile time changable words.
- appl: the `dict_minimum.inc` und `dict_core.inc` files need to be included within the application defition files.

- core: **pad** is no longer used by amforth itself.
- core: reorder internal code in **interpret** to get rid of **0=** calls.

24.1.2010: release 3.7

- core: atxmega 128 support (no compiler yet).
- core: new word **>number**. **number** accepts trailing (!) dots to enter double cell numbers.
- lib: enhanced multitasker with turnkey support. Thanks to Erich Wälde for in depth debugging and testing.
- lib: new word **anew** drops word definitions if already defined, starts a new generation.
- core: USER area is now split into system and application user areas, system user area is pre-set from EEPROM.
- new: source repository Incubator for not-yet-ready-but-interesting projects, volunteers welcome.

1.10.2009: release 3.6

- core: new word **environment**. It provides the environment wordlist identifier, thus make it possible to create own environment queries as standard words.
- core: new word **d=**.
- core: amforth runs partially on an atmega2561 and atxmega's, there is still no working flash store word (**i!**) therefore only the interpreter is available yet.
- core: moved the usart init values to appl section.
- core: added a poll-only receive word, selectable at compile time. Disable the rx interrupt to use it.

1.9.2009: release 3.5

- core: re-structure the usart code, added a non-interrupt based transmit word (TX), selectable at compile time.
- lib: added **xt>nfa** that goes from the XT to the name field address.
- core: bugfix **recurse**.
- core: restructured EEPROM, never depend on fixed addresses for system values.
- core: added a `dict_wl.inc` file with most of the non-core wordlist commands.

11.4.2009: release 3.4

- core: renamed the words for the serial terminal to be more generic since they can deal with any serial port, not only the first one.
- lib: dropped **forget** since it cannot work with multiple wordlists, fixed **marker**.
- core: changed again **digit?** stack effect (and fixed a little bug).
- core: **number** honors a leading &, $ or % sign to temporarily switch to DECIMAL, HEX or BIN base resp. Thanks to Michael Kalus for factoring the code.

22.2.2009: release 3.3

- core: faster **noop**.
- added ANS94 search order wordlist.
- core: **within** had problems with signed boundaries, literal numbers are processed faster (again).
- core: improved **digit?** and **number**. They now report errors on invalid characters at the wrong position. The following strings are no longer valid numbers: –1 or 0@ (in base hex).
- core: **-1 spaces** now prints nothing, Fix from Lothar Schmidt.
- core: **(loop)** (runtime of loop) now checks for equality only, as specified in ANS94.

10.1.2009: release 3.2

- core: bugfix for trailling 0x00 byte during **itype**.
- core: enable use of other usart port than 0.
- pc-host: Ken Staton wrote a nice pc based terminal with upload functionality.
- core: New controllers: ATmega328P and ATmega640.
- core: changed **digit** to **digit?** found in many other forth's.
- core: new word **within**.
- core: split application dictionary definition into 2 parts, one for the lower flash, one for the upper (NRWW) flash. Both can be empty, but need to exists.
- core: changed some names for internal constants (baudrate -> BAUD) and registers (EEPE vs EEWE).
- core: new directory `drivers/` for low level driver functions. Currently only the generic ISR and the USART0 interrupt handler.

10.11.2008: release 3.1

- core: **icompare** now has a similiar stack effect as **compare**.
- core: new word: **environment?**. Supports **/hold** query.
- core: Strings in flash (incl. names in the dictionary) contain now 16bit length information, previously only 8 bit.

17.10.2008: release 3.0

- core: **s"** new with interpreter semantics.

```
s" hello world" type`
```

works at the command prompt. The compiled version is

```
: hw s" hello world" itype ;
```

- core: Placement of Stacks is now an application setting. See example apps.
- core: added VM register A and B. See Stephen Pelc' Slides for details. Uses Atmega Register R6:R7, R8:R9 resp.
- core: added **cmove** as a primitve.

- core: **f_cpu** used the old (pre-2.7) stack order for double cell values.
- lib: moved some definitions to more appropriate files.

1.8.2008: release 2.9

- core: **heap**, **here** and **edp** are now VALUEs. **dp** is gone (use **here**)
- lib: more VT100 sequences.
- core: The TIB location and size are accessible with the VALUEs **TIB** and **TIBSIZE**.
- core: fixed TIBSIZE default configuration.
- lib: created math.frt, contains among others the standard words **sm/rem**, **fm/mod**.
- Alexander Guy fixed a bug in **u*/mod**.
- Bernard Mentink adapted Julian Noble's Finite State Machine code.
- applications: Lubos Pekny designed a smart computer with a 4line character LCD and a PS/2 keyboard. Details are in the Application Repository, a video is available as well.

27.6.2008: release 2.8

- core: Lubos Pekny found that **-jtag** sometimes used the wrong mcu register.
- core: Bernard Mentink wrote a Atmega128 device file, Thanks alot.
- core: Atmega88 & Atmega168 work too.
- core: Fixed regression for atmega128.
- core: Moved serial interface words to application dictionary (not every amforth installation may have a serial terminal).
- library: Updated assembler from Lubos Pekny.
- examples: sieve benchmark, optimized for 1K RAM.

5.4.2007: release 2.7

- core, lib and sample applications are now in one package.
- restructured repository layout. Now the trunk has most of the sources.
- core: re-arranged the register mapping.
- core: **m*** was in fact **um***.
- core: double cell numbers changed stack order: TOS is now the most significant cell.
- library: new: assembler written by Lubos Pekny, www.forth.cz. Thank you!
- examples: PWM example from Bruce Wolk. TWI/I2C EEPROM access

27.1.2008: release 2.6

- core: new defining words **code** and **end-code**. **code** starts a new dictionary header with the XT set to the data field. The 2nd one appends the **jmp NEXT** call into the dictionary.
- core: removed the pre-assembled **case** / **endcase** words. Added them as forth library.

- core: new words **-jtag** (turns off JTAG at runtime) and **-wdt** (turns off watch dog timer at runtime. They need to be implemented as primitives due to timing requirements.
- core: **quit**: Keep **base** when handling an exception.
- library: TWI/I2C EEPROM Support.

6.12.2007: release 2.5

- Bug: **hex 8000 .** froze the controller. Now it prints -8000. Thanks to Lubos for the hint.
- Moved init of **base** from **quit** to **cold**. **turnkey** be used to change it permanently. Thanks to Lubos for the hint.
- nice looking dumper words for RAM/EEPROM/FLASH, dropped idump.asm.
- Extended Upload utility (`tools/amforth-upload.py`) from piix: include files using following syntax:

```
\ demo file
#include ans94/marker.frt
marker empty
```

- usart transmit (**tx0**) made more robust.
- User Area restructured for the new multitasker.
- added documentation: Karl's *User's Manual* and a *Technical Guide*.

11.10.2007: release 2.4

- Added AT90CAN128. Other Atmega128 style controllers should work too.
- lot of fine tuning.
- dropped the assembler device init portion.
- New file: `dict_compiler.inc`. Without these words the forth system is (more or less) a pure interactive system without extensibility.
- new words **[char]**, **fill**.
- re-arranged usart code. fixed bug when usart baud rate calculation leads to values greater 255.
- renamed **/int** to **-int** and **int** to **+int**, it's more fortish ;=)

29.7.2007: release 2.3

- new words **spaces** and **place**.
- Improved **i!**.
- bugfixing runtime parts of **do/loop** and co.
- re-coded **find** and **icompare** for better readability.
- eliminated code duplets in some primitives.
- moved usart init from **cold** to application specific turn key action. Added error checking in receive module.

17.6.2007: release 2.2

- new download section: application
- optional dictionary is now part of the application, therefore renamed to dict_appl.
- new words: **leave** and **?do**.

22.5.2007 release 2.1

- changed stack effect for **#** to ansi (from single cell value to double cell). Double cell values do not work (yet).
- introduced **deferred** words instead of tick-variables. Works for EEPROM based vectors (turnkey), RAM based (**pause**) and User based (**emit** etc) vectors.
- new words: **wdr** (Watchdog reset), **d>** and **d<** (double cell compare).

2.5.2007 release 2.0

- internal restructure of targets.
- new words: **u>** and **u<**.
- bugfixing interrupts.
- new word: **log2** logarithm to base 2, or the number of the highest 1 bit.
- fixed wrong addresses for usart-io (esp. butterfly)

25.4.2007 release 1.9

- renamed `dict_low.asm` to `dict_minimal.asm`.
- new word **parse** (c – addr len) parses **source** for char delimited strings.
- new word **sleep** (–) puts the controller into (previously defined) sleep mode.
- new words **s"** (– addr len) parses TIB for " character and compiles it into flash, **s,** (addr len –) does the real copying of the string into flash at **here** together with the invisible word **(sliteral)** (– flash-addr len).
- bugfix: **f_cpu** had wrong word order. Use **swap** as a temporary work around.‘
- re-wrote initialisation of usart0 (baud –) to forth code. Startup speed is taken from (eeprom) VALUE **baud0**.

10.4.2007 release 1.8

- interrupt handling redesigned. Now every interrupt (except those for usart0) can be used. **intcounter** is gone. New words are **int@**, **int!** and **#int**.
- double and mixed cell arithmetics.‘
- bugfix: proper initialization of data stack pointer. Thanks to Maciej Witkowiak.
- move TOS into register pair.

3.4.2007 release 1.7

- new word: **f_cpu** sets a double cell value with the cpu clock rate.
- **hld** is now at **pad** to save RAM.
- **pad** did return some compile-time stochastic value‘
- lots of internal changes.
- optional dictionary: **d-**, **d+**, **s>d** and **d>s**.

25.3.2007 release 1.6

- split `blocks/ans.frt` into pieces.
- **sign** no longer inserts a space for non-negative values.
- new word: **/key**. It is vectorized via **'/key** and gets called by **accept** to signal the sender to stop transmission. See `blocks/xonxoff.frt` for example usage.
- replaces **up** with **up@** and **up!**.
- new word: **j** (– n).
- new word: **?execute** (xt|0 –) if non-zero execute the XT.
- The Atmega644 works fine :=) but needs the Atmel assembler (see *FAQ*) :=(
- Bugfix: **+!** did a **+** only.
- Bugfix: too many spaces in **.** (dot).
- give user variables **rp** and **sp** a name.

14.3.2007 release 1.5

- changed: **itype** and (new) **icount** refactored by Michael Kalus. These words now have similiar stack effects as there RAM counterparts.
- changed: **.** now operates on signed values.
- new word: **u/mod** is basically the former **/mod**.
- new word: **u.** to display unsigned values.
- fixed bug in **/mod** for values less -FF (hex).
- **create** left the address of the XT insted of the PFA. Fixed.
- deleted word: **idump**. It is now in the file `blocks/misc.frt`.
- new word: **:noname** (– xt) creates headerless entry in the dictionary.
- new word: **cold** as main entry point. It executes the turnkey action. **abort** & co do not trigger the turnkey action.

5.3.2007 release 1.4

- **pad** is now in the unsed (according to **heap**) ram. That may help **word** to store longer strings.
- new word: **unused** (– n) gives the number of unused flash cells in the dictionary.
- **/mod** (and **/** and **mod**) now honor signed numbers, division is symmetric.

- new word: **abort"**
- **quit** now aborts on every catched exception.
- **quit** no longer prints anything, **ver** is now a turnkey action.
- new optional dictionary, included at compiletime. Contains now **case** & Co and some **d-** words for double cell arithmetics.

24.2.2007 release 1.3

- bug: **digit** did not work properly
- bug: **<**: equal is not less
- interrupts are processed faster
- Interrupt counter are now only 1 byte long (access with **c@**)
- change: **allot** works now for ram not for flash
- added/corrected stack comments
- bug: **create** leaves flash address insted of first cell content
- change: **.s** nicer for empty stack
- internal: **i!** internally completly turns off interrupts
- bug: **abort** now works again, error was in **quit**
- bug: **while** and **repeat** changed stack effects
- bug: **r@** now works correctly
- new word: **immediate**
- removed words: **forget**, **postpone** (these and many more are now in the **blocks/ans.frt** library)
- bug: if **'** (tick) does not find the word, it now throws the exception -13 Many thanks to Ulrich Hoffmann for providing feedback and corrections!

3.2.2007 release 1.2

- anyone missed **emit?**?.
- increased user area to 24 bytes (12 cells). Fixed a overlap between **handler** and **emit** ff.
- AVR *AVR Butterfly* works (again). Many thanks to the German FIG for donating one.
- internal changes for multitarget development (for the AREXX asuro minirobot).

20.1.2007 release 1.1

- **emit**, **key** and **key?** are now vectored via **user** based variables.
- **forget** frees most of the flash space too
- internal go back for **i!** to previous code
- Code for Atmega8 was broken due to nrww flash overflow (found by Milan Horkel)
- Bugfix: backspace key in **accept** now stops at beginning of line (found by Milan Horkel)

4.1.2007 release 1.0

- new immediate word: **[']**
- new word **user** defines user variables
- new controller: atmega169 (Atmel Butterfly)
- renamed **eheap** to **edp**.

17.12.2006 release 0.9

- interrupts in high level forth colon words (INT0 and INT1 for now).
- new word: **noop** a colon word for doing nothing.
- **number** respects minus sign
- changed **turnkey** into **'turnkey**. The "turn-off" value is now 0 (zero)
- new words: **pause** and **'pause**. **pause** will execute the XT stored in **'pause** (a RAM cell) when non zero
- **handler** (used by **cactch** and **throw**) is a USER variable.

7.12.2006 release 0.8

- new words: **create**, **does>**, **up**, **0**
- Support for user variable, turned **base**, **rp0** and **sp0** into user variables
- words like **(do)** which should not by called by user are now invisible to save nrww flash space
- bugfix for negative increment for **+loop**.

24.11.2006 release 0.7

- new word: **turnkey**: executed whenever **quit** starts.
- numbers may contain lower case characters (if **base** permits)
- bugfixing **case** & co.
- **number** emits -13 if an invalid character is found
- renamed **vheader** to **(create)**
- **abort** re-initializes both stacks
- made backslash **** immediate

20.11.2006 release 0.6

- backspace now works in **accept**
- **depth** based on **sp0**/**sp@**
- "unused" control characters are treated as spaces
- bugfixes for **(loop)** and **(+lopp)**.

- New words: **`1ms`** busy waits 1 millisecond

13.11.2006 release 0.5

- definition files for varios atmega types
- core wordlist should be complete
- internal cleanups and bugfixes

5.11.2006 release 0.4

- start using **`catch`**/**`throw`**
- Atmega8 works fine
- few new words (**`case`**, comments)
- nicer prompt

31.10.2006 release 0.3

- New website
- Atmega16 works fine
- Bugfixing, true flag always 0xffff

27.10.2006 release 0.2

- Compiler works
- Many new wrds

16.10.2006 release 0.1

- first public release
- interpreter over serial terminal